Installation and service instructions

for contractors

Vitocal 200-A
Type AWMOF-201.A1.06-230-V004 to AWMOF-201.A1.12-230-V004
Type AWMOF-201.A1.06-230-V005 to AWMOF-201.A1.12-230-V005

Outdoor unit for the **Vitocal 200-A ie** air/water heat pump in monoblock design
for room heating, room cooling and DHW heating in heating systems

VITOCAL 200-A

6260605 GB 06/2026

Please keep safe.

Safety instructions

⚠ Please follow these safety instructions closely to prevent accidents and material losses.

Safety instructions explained

⚠ **Danger**
This symbol warns against the risk of injury.

! **Please note**
This symbol warns against the risk of material losses and environmental pollution.

Note
Details identified by the word "Note" contain additional information.

The outdoor unit contains easily flammable refrigerant in safety group A3 according to ISO 817 and ANSI/ASHRAE Standard 34.

Target group

These instructions are exclusively intended for authorised contractors.

- Work on the refrigerant circuit with flammable refrigerant in safety group A3 may only be carried out by authorised contractors. These contractors must be trained in accordance with EN 378 Part 4 or IEC 60335-2-40, Section HH. The certificate of competence from an industry-accredited body is required.
- Brazing/soldering work on the refrigerant circuit may only be carried out by contractors certified in accordance with ISO 13585 and AD 2000, datasheet HP 100R. And only by contractors qualified and certified for the processes to be carried out. The work must fall within the range of applications purchased and be carried out in accordance with the prescribed procedures.
  Brazing/soldering work on accumulator connections requires certification of personnel and processes by a notified body according to the Pressure Equipment Directive (2014/68/EU).
- Work on electrical equipment may only be carried out by qualified electricians.
- All safety-relevant points must be checked regularly by the relevant certified contractors, especially before initial commissioning and during maintenance, inspection and decommissioning.
- The system must be commissioned by the system installer or a qualified person authorised by the installer.

6260605

Safety instructions (cont.)

Regulations to be observed

- National installation regulations
- Statutory regulations for the prevention of accidents
- Statutory regulations for environmental protection
- Statutory requirements for pressure equipment:
  Pressure Equipment Directive 2014/68/EU
- Codes of practice of the relevant trade associations
- Relevant country-specific safety regulations
- Applicable regulations and guidelines for operation, service, maintenance, repair and safety of cooling, air conditioning and heat pump systems containing flammable and explosive refrigerant.

Safety instructions for working on the system

The outdoor unit contains flammable refrigerant R290 (propane C3H8). If there is a leak, the escaping refrigerant may form a flammable or explosive atmosphere in the ambient air. A safety zone is defined in the immediate vicinity of the outdoor unit, in which special rules apply when working on the appliance.

Working in the safety zone

⚠ **Danger**
Risk of explosion: Escaping refrigerant may form a flammable or explosive atmosphere in the ambient air.
Take the following measures to prevent fire and explosion in the safety zone:

- Keep ignition sources away, e.g. naked flames, hot surfaces, electrical devices not free of ignition sources, mobile devices with integrated batteries (e.g. mobile phones, fitness watches, robotic lawn mowers, etc.).
- Permissible tools:
  All tools for working in the safety zone must be designed and explosion-protected in accordance with the applicable standards and regulations for refrigerant belonging to safety group A3, e.g. brushless machines (cordless screwdrivers), extraction equipment, disposal containers, installation aids, vacuum pumps, conductive hoses, mechanical tools of non-sparking material, etc.
  Note
  The tools must also be suitable for the pressure ranges in use.
  Tools must be in perfect maintenance condition.
- The electrical equipment must meet the requirements for areas at risk of explosion, zone 2. This equipment must not be a source of electrical ignition.
- Do not use flammable materials, e.g. sprays or other flammable gases.

Safety instructions (cont.)

- Discharge static: Before beginning work, touch earthed objects, such as heating or water pipes.
- Do not remove, block or bridge safety equipment.
- Do not make any changes:
  Do not modify the outdoor unit, inlet/outlet lines, electrical connections/cables or the surroundings. Do not remove any components or seals.

Working on the system

- Switch off the power supply to the indoor unit and outdoor unit, e.g. at a separate fuse or main switch. Check that the system is no longer live.
  Note
  In addition to the control circuit there may be several power circuits.

  ⚠ **Danger**
  Contact with live components can result in severe injuries. Some components on PCBs remain live even after the power supply has been switched off.
  Before removing covers from the appliances, wait at least 15 min until the voltage has dropped out.
- Safeguard the system against reconnection.
- Wear suitable personal protective equipment when carrying out any work.

⚠ **Danger**
Hot surfaces and fluids can result in burns or scalding. Cold surfaces may cause frostbite.
- Before maintenance and service work, switch off the appliance and let it cool down or warm up.
- Do not touch hot or cold surfaces on the appliance, fittings or pipework.

! **Please note**
Electronic assemblies can be damaged by electrostatic discharge. Before beginning work, touch earthed objects, such as heating or water pipes, to discharge any static.

Working on the refrigerant circuit

R290 refrigerant (propane) is an air displacing, colourless, flammable, odourless gas which forms explosive mixtures with air.
Extracted refrigerant must be properly disposed of by authorised contractors.

Take the following action before beginning work on the refrigerant circuit:
- Check the refrigerant circuit for leaks.
- Ensure very good ventilation especially in the floor area and sustain this for the duration of the work.
- Secure the area surrounding the work area.
- Inform the following persons of the type of work to be carried out:
  - All maintenance personnel
  - All persons in the vicinity of the system.
- Inspect the area immediately around the heat pump for flammable materials and ignition sources:
  Remove all flammable, movable materials and any ignition sources from the safety zone.
- Before, during and after the work, check the surrounding area for escaping refrigerant using an explosion-proof refrigerant detector suitable for R290. This refrigerant detector must not generate any sparks and must be suitably sealed.

Safety instructions (cont.)

- A CO_2 or powder extinguisher must be to hand in the following cases:
  - Refrigerant is being extracted.
  - Refrigerant is being topped up.
  - Brazing/soldering or welding work is being carried out.
- Display signs prohibiting smoking.

⚠ **Danger**
Escaping refrigerant can lead to fire and explosions that result in very serious injuries or death.
- Do not drill or apply heat to a refrigerant circuit filled with refrigerant.
- Do not operate Schrader valves unless a fill valve or extraction equipment is attached.
- Take measures to prevent electrostatic charge.
- No smoking! Prevent naked flames and sparks. Never switch lights or electrical appliances on or off.
- Components that contain or contained refrigerant must be labelled, and stored and transported in well ventilated areas in accordance with the applicable regulations and standards.

⚠ **Danger**
Direct contact with liquid and gaseous refrigerant can cause serious damage to health, e.g. frostbite and/or burns. There is a risk of asphyxiation if it is breathed in.
- Prevent direct contact with liquid and gaseous refrigerant.
- Wear personal protective equipment when handling liquid and gaseous refrigerant.
- Never breathe in refrigerant vapours.

⚠ **Danger**
Refrigerant is under pressure: Mechanical stress on pipework and components can cause leaks in the refrigerant circuit.
Do not apply loads to the pipework or components, e.g. by leaning on them or placing tools on them.

⚠ **Danger**
Hot and cold metallic surfaces of the refrigerant circuit may cause burns or frostbite on contact with skin.
Wear personal protective equipment to protect against burns and frostbite.

! **Please note**
When refrigerant is being removed, hydraulic components may freeze. Drain heating water from the heat pump beforehand.

⚠ **Danger**
Damage to the refrigerant circuit can cause refrigerant to enter the hydraulic system.
After completion of the work, vent the hydraulic system correctly. When doing so, ensure the area is sufficiently ventilated.

Safety instructions (cont.)

Installation

Frost protection

Please note
Frost can cause damage to the heat pump.
- Thermally insulate all the hydraulic lines.
- In order to activate the frost protection function, electrically connect the heat pump before filling the secondary circuit. Switch on the power supply. Turn on the ON/OFF switch on the indoor unit.
- Only fill the secondary circuit with suitable fill water in accordance with VDI 2035, not with media containing antifreeze.

Electrical connecting cables

Danger
With short electrical cables, if the refrigerant circuit leaks, gaseous refrigerant may reach the inside of the building.
- Seal the building entry points using the most suitable current technology. Route the lines into the building through, for example, a suitable pipe liner with wall seal flanges.
- Min. length of the electrical connecting cables between the indoor and outdoor unit: 3 m

Repair work

Please note
Repairing components that fulfil a safety function can compromise the safe operation of the system.
- Sealed electrical components must not be repaired.
- Faulty components must be replaced with original spare parts from the manufacturer.
- Do not undertake any repairs on the inverter. Replace the inverter if there is a fault.

Auxiliary components, spare and wearing parts

Please note
Auxiliary components, spare parts and wearing parts that have not been tested together with the system can compromise its function. Installing non-authorised components and making non-approved modifications or conversions can compromise safety and may limit the warranty.
For installation and replacement, use only original parts from the manufacturer or spare parts approved by the manufacturer.

Safety instructions for operating the system

What to do if refrigerant escapes

Danger
Escaping refrigerant can lead to fire and explosions that result in very serious injuries or death.
Take the following measures to prevent fire and explosion:
- Ensure very good ventilation especially in the floor area of the outdoor unit.
- No smoking! Prevent naked flames and sparks. Never switch lights or electrical appliances on or off.
- Evacuate any people from the danger zone.

6260605

Safety instructions (cont.)

- From a safe position, switch off the power supply to all system components.
- Remove ignition sources from the danger zone.
- Let the system user know that no ignition source may be brought into the danger zone for the duration of the repair.
- Repair work must be carried out by an authorised contractor.
- Do not restart the system until repairs and a leak test have been carried out. Perform a leak test for both the refrigerant circuit and the connections on the heating water side.

⚠ **Danger**
Direct contact with liquid and gaseous refrigerant can cause serious damage to health, e.g. frostbite and/or burns.
Prevent direct contact with liquid and gaseous refrigerant.

⚠ **Danger**
Breathing in refrigerant may cause suffocation.
Never breathe in refrigerant vapours.

If water escapes from the appliance

⚠ **Danger**
If water escapes from the appliance there is a risk of electric shock.
Switch off the heating system at the external isolator (e.g. fuse box, domestic distribution board).

⚠ **Danger**
If water escapes from the appliance, there is a risk of scalding.
Never touch hot heating water.

What to do if the outdoor unit ices up

! **Please note**
A build-up of ice in the condensate pan and in the fan area of the outdoor unit can cause damage to the equipment.
Please note the following:

- Do not use mechanical items/aids for the removal of ice.
- Before using electrical heating appliances, check the refrigerant circuit for leaks with a suitable measuring device.
  - The heating appliance should not be a source of ignition.
  - The heating appliance must meet the requirements of EN 60335-2-30.
- If ice regularly builds up on the outdoor unit (e.g. in areas where frost and heavy fog occur frequently), install a fan ring heater that is suitable for refrigerant R290 and/or an electric ribbon heater in the condensate pan (accessories).

Safety instructions for storage of the outdoor unit

The outdoor unit is charged at the factory with refrigerant R290 (propane).

Safety instructions (cont.)

⚠ **Danger**
Escaping refrigerant can lead to fire and explosions that result in very serious injuries or death. There is a risk of asphyxiation if it is breathed in.
Store the outdoor unit in the following conditions:

- An explosion prevention plan must be in place for storage.
- Ensure there is sufficient ventilation at the storage location.
- Temperature range for storage: –25 °C to 70 °C
- Only store the outdoor unit in its ex-factory protective packaging.
- Protect the outdoor unit against damage.
- The maximum number of outdoor units that may be stored in one place is determined by local conditions.

6260605

Index

1. Information

Disposal of packaging 11
Symbols 11
Intended use 11
Product information 12
- Layout and functions 12
- System examples 14
- Maintenance parts and spare parts 14

2. Preparing for installation

Requirements for on-site connections 16
- Dimensions of Vitocal 200-A outdoor unit, sizes 06 to 08 16
- Dimensions of Vitocal 200-A outdoor unit, sizes 10 to 12 17

3. Siting the outdoor unit

Transporting the outdoor unit 18
- Transporting with the transport and siting aid (accessories) 18
- Transport by crane 18

Installation information 19
- Floorstanding installation 19
- Wall mounting 20
- Roof installation 20
- Siting 21
- Weather influences 21
- Condensate 21
- Structure-borne noise insulation and vibration isolation between the building and outdoor unit 22

Installation location 22
Minimum clearances 23
- Minimum clearances for 1 outdoor unit 23
- Minimum clearances for a heat pump cascade (max. 4 outdoor units) 25

Safety zone 26
- Safety zones for individual outdoor units 27
- Safety zones for a heat pump cascade (max. 4 outdoor units) 30

Condensate drain 33
- Free condensate drain without drain pipe 33
- Central condensate drain via drain pipe 33

Foundations for floorstanding installation with bracket (accessories) ... 34
Foundations for floorstanding installation with anti-vibration base (accessories) 38
Line entry below ground level 40
- Installation in a straight trench using the Quattro connection line made from corrugated stainless steel pipe 40
- Laying lines in a trench with a bend 41

Line entry above ground level 42
Wall mounting with bracket set 44

4. Hydraulic connection of the outdoor unit

Opening the outdoor unit 45
Connection of hydraulic connection lines to the secondary circuit 46
- Connections to the outdoor unit 46
- Adaptor for connecting the Quattro connection line (accessories) to the outdoor unit 46
- Components required for flushing the outdoor unit connection lines — secondary circuit 47

5. Electrical connection of the outdoor unit

Preparing the electrical connections 49
- Recommended power cables and fuse protection 49

Cable routing to the terminal area 50
Layout of the electrical connections 51
Establishing a CAN bus connection 51
- Terminator for CAN bus system 51
- CAN bus connection via an on-site cable 52

Index (cont.)

- Routing the CAN bus cable ... 52
- Connecting the CAN bus communication cable between heat pump control unit — outdoor unit (accessories) ... 53

Mains connection ... 54
- Outdoor unit mains connection ... 55
- 230 V~/400 V~ mains connection for the instantaneous heating water heater ... 56
- Mains connection for instantaneous heating water heaters in heat pump cascades ... 57

Power supply with power-OFF: Without on-site load disconnect ... 57
Releasing the transport bracket ... 59
Closing the outdoor unit ... 60

6. Commissioning, inspection, maintenance

Steps - commissioning, inspection and maintenance ... 61

7. System configuration, diagnostics, messages

Functions available via the service menu ... 70
- Parameters and messages ... 70

8. Outdoor unit maintenance

Checklist for maintenance work ... 71
Overview of electrical components ... 74
OCU refrigerant circuit controller ... 75
Overview of internal components ... 76
- Outdoor unit, sizes 06 to 08 ... 76
- Outdoor unit, sizes 10 to 12 ... 78

Draining the outdoor unit on the secondary side ... 79
- Opening the outdoor unit ... 80
- Opening the non-return valve ... 81
- Draining the outdoor unit ... 81

Refrigerant circuit flow diagrams ... 82
- Heating mode ... 82
- Cooling mode ... 83

Extracting the refrigerant ... 84
Procedure for replacing components in the refrigerant circuit ... 86
Testing pressure resistance ... 87
Filling the refrigerant circuit ... 88
Status display for central circulation pump (secondary pump) ... 89
Checking the temperature sensors ... 89
- NTC 10 kΩ (no marking) ... 90

Checking the pressure sensors ... 91
- Heating water pressure sensor (BP03) ... 91
- Refrigerant circuit pressure sensors ... 91

Checking the fuses ... 91

9. Specification

... 93

10. Appendix

Sound transmission checklist ... 96
Final decommissioning and disposal ... 98

11. Ordering individual parts

Ordering individual parts for accessories ... 100

12. Certificates

Declaration of conformity ... 101

13. Keyword index

... 102

6260605

Disposal of packaging

Please dispose of packaging waste in line with statutory regulations.

Symbols

Symbols in these instructions

Symbol	Meaning
	Reference to other document containing further information
1.	Step in a diagram: The numbers correspond to the order in which the steps are carried out.
	Warning of personal injury
!	Warning of material losses and environmental pollution
	Live electrical area
	Pay particular attention.
	▪ Component must audibly click into place. or ▪ Acoustic signal
	▪ Fit new component. or ▪ In conjunction with a tool: Clean the surface.
	Dispose of component correctly.
	Dispose of component at a suitable collection point. Do **not** dispose of component in domestic waste.

The steps in connection with commissioning, inspection and maintenance are found in the "Commissioning, inspection and maintenance" section and identified as follows:

Symbol	Meaning
	Steps required during commissioning
	Not required during commissioning
	Steps required during inspection
	Not required during inspection
	Steps required during maintenance
	Not required during maintenance

Symbols on the heat pump

Symbol	Meaning
	Warning of flammable materials (ISO 7010 - W021)
	Observe the operating manual (ISO 7000 - 0790)
	Observe the instructions for use/operating instructions (ISO 7000 - 1641)
	Service indicator: Refer to the operating manual (ISO 7000 - 1659)
	Warning of hot surface (ISO 7010 - W017)

Intended use

The appliance is only intended to be installed and operated in sealed unvented heating systems that comply with EN 12828, with due attention paid to the associated installation, service and operating instructions.

Depending on the version, the appliance can only be used for the following purposes:
- Central heating
- Central cooling
- DHW heating

Intended use (cont.)

The range of functions can be extended with additional components and accessories.

Intended use presupposes that a fixed installation in conjunction with permissible, system-specific components has been carried out.

Commercial or industrial usage for a purpose other than central heating/cooling or DHW heating shall be deemed inappropriate.

Incorrect usage or operation of the appliance (e.g. the appliance being opened by the system user) is prohibited and will result in an exclusion of liability. Incorrect usage also occurs if the components in the heating system are modified from their intended function.

Note
The appliance is intended exclusively for domestic or semi-domestic use, i.e. even users who have not had any instruction are able to operate the appliance safely.

Product information

Vitocal 200-A ie are air/water heat pumps in monoblock design consisting of the Vitocal 200-A outdoor unit and one of the following components:
- Indoor unit with heat pump control unit and integral hydraulics IDU Modular, IDU Comfort, IDU Hybrid or IDU Hydro
  Or
- Indoor unit with heat pump control unit, integral hydraulics and integral IDU Compact DHW cylinder
  Or
- Using a controller to regulate a system with on-site hydraulics:
  Universal controller ie
  IDU Controller ie

These installation and service instructions describe the Vitocal 200-A outdoor unit.

Layout and functions

The following are integral components in the outdoor unit:
- Refrigerant circuit with factory-filled refrigerant R290
- Refrigerant circuit controller OCU (Outdoor Control Unit)
- High efficiency central circulation pump (secondary pump) for secondary circuit or heating/cooling circuit 1 with integral flow rate capturing
- Instantaneous heating water heater
- Safety valve
- Heating water pressure sensor

Refrigerant circuit

The refrigerant circuit works with refrigerant R290 (propane).
All components of the refrigerant circuit are located in the outdoor unit, including the refrigerant circuit controller with 2 electronic expansion valves. Subject to operating conditions, compressor output is matched via inverter control.
To provide room cooling, there is an electronically controlled reversal of the refrigerant flow direction within the refrigerant circuit.

Hydraulics

Combination of outdoor and indoor units with integral hydraulics

The indoor and outdoor units are connected to each other hydraulically. Some of the hydraulic components for room heating/room cooling and DHW heating are located in the outdoor unit, and some are located in the indoor unit.
The integral high efficiency central circulation pump (secondary pump) in the outdoor unit supplies either the secondary circuit or heating/cooling circuit 1, depending on the system configuration.
Switching between room heating/room cooling, DHW heating and defrosting is achieved via the indoor unit's integral 4/3-way valve. The required flow rates for room heating/room cooling, DHW heating or defrosting are controlled via this 4/3-way valve. In addition, the 4/3-way valve acts as an overflow valve to guarantee the minimum system flow rate.
Depending on the system configuration, the heat required to defrost the evaporator is supplied by either the integral buffer cylinder in the indoor unit, an external heating water buffer cylinder or heating/cooling circuit 1.

Product information (cont.)

Combination of outdoor unit and controller

The integral high efficiency central circulation pump in the outdoor unit supplies either the secondary circuit or heating/cooling circuit 1, depending on the system configuration.
Switching between room heating/room cooling, DHW heating and defrosting is achieved via an on-site 3/2-way valve. The required flow rates for room heating/room cooling, DHW heating or defrosting are controlled via this 3/2-way valve.
The minimum flow rate must be ensured by the customer, e.g. through heating/cooling circuits without mixer, an external buffer cylinder, etc.
Depending on the system configuration, the heat required to defrost the evaporator is supplied by either an external heating water buffer cylinder or the heating/cooling circuit. When outside temperatures are below 10 °C, the system is regulated to a minimum return temperature of approx. 15 °C.

Instantaneous heating water heater

An instantaneous heating water heater is installed in the heating water flow to support the heat pump. In power-OFF mode or if the heat pump develops a fault, this instantaneous heating water heater can also be switched on as the sole heat source, e.g. for frost protection of the system.

Depending on the appliance version, the instantaneous heating water heater can be turned on as an alternative to or in addition to room heating and/or DHW heating:

- Instantaneous heating water heater for types ...-V004: :
  - The instantaneous heating water heater is only switched on as an **alternative** to the heat pump when, for example, outside temperatures are very low and the heat pump cannot operate (protective function).
  - The instantaneous heating water heater is powered via the outdoor unit mains connection.
- Instantaneous heating water heater for types ...-V005:
  - The instantaneous heating water heater is switched on **in addition** to the heat pump when, for example, the heating output of the heat pump is insufficient under certain conditions or for convenient DHW heating (comfort function).
  - The instantaneous heating water heater is powered by a separate mains connection.

Heat pump cascade: Only when the outdoor unit and controller are used in combination

An external buffer cylinder is always required for heat pump cascades.
A heat pump cascade consists of up to 4 outdoor units of the same size. The entire system is operated and controlled centrally by the heat pump control unit.

Type plates

The type plate is located at the back of the appliance.

Product identification according to type plate

	Ⓐ	Ⓑ	Ⓒ	Ⓓ	Ⓔ	Ⓕ		Ⓖ	Ⓗ	Ⓚ	Ⓛ		Ⓜ		Ⓝ		Ⓞ
Outdoor unit	Vitocal 200-A	A	W	M	O	F	–	2	0	1	. A1	.	10	–	230	–	V004

Pos.	Value	Meaning
Ⓐ	Name	
	Vitocal 200-A	Product name of the outdoor unit (ODU), product segment **2**00
Ⓑ	Medium, primary circuit	
	A	**A**ir
Ⓒ	Medium, secondary side	
	W	**W**ater
Ⓓ	Refrigerant circuit design	
	M	**M**onoblock design

Pos.	Value	Meaning
Ⓔ	Siting	
	O	**O**utdoor installation
Ⓕ	Type	
	F	Floorstanding outdoor unit (**F**loorstanding)
Ⓖ	Product segment	
	2	200
Ⓗ	Flow temperature	
	0	Without special function

Product information (cont.)

Pos.	Value	Meaning
Ⓚ	Number of compressors in refrigerant circuit	
	1	1 compressor
Ⓛ	**A1**	Product generation
Ⓜ	**06** to **12**	Outdoor unit size
Ⓝ	Compressor mains connection	
	230	1/N/PE 230 V~/50 Hz

Pos.	Value	Meaning
Ⓞ	Outdoor unit product version	
	V004	Operation of the instantaneous heating water heater only as an alternative to heat pump operation
	V005	Operation of the instantaneous heating water heater possible in addition to heat pump operation, e.g. for convenient DHW heating

Outdoor unit product version

Outdoor unit						
▪ ..-230-V004	■	230 V~		□	□	○
▪ ..-230-V005	■	230 V~/ 400 V~	230 V~	□	□	○

- Central circulation pump (secondary pump)
- Rated voltage, instantaneous heating water heater
- Rated voltage, outdoor unit
- Electric ribbon heater for condensate pan
- Fan ring heater
- Heat pump cascade
- ■ Integrated
- □ Accessories
- ○ Possible

System examples

Available system examples: **schematics.viessmann-climatesolutions.com**

Maintenance parts and spare parts

You can identify and order maintenance parts and spare parts directly online.

PartnerShop

shop.viessmann-climatesolutions.com

ViParts web application

viparts.viessmann-climatesolutions.com

Product information (cont.)

ViParts spare part app

Download on the App Store

GET IT ON Google Play

Requirements for on-site connections

Dimensions of Vitocal 200-A outdoor unit, sizes 06 to 08

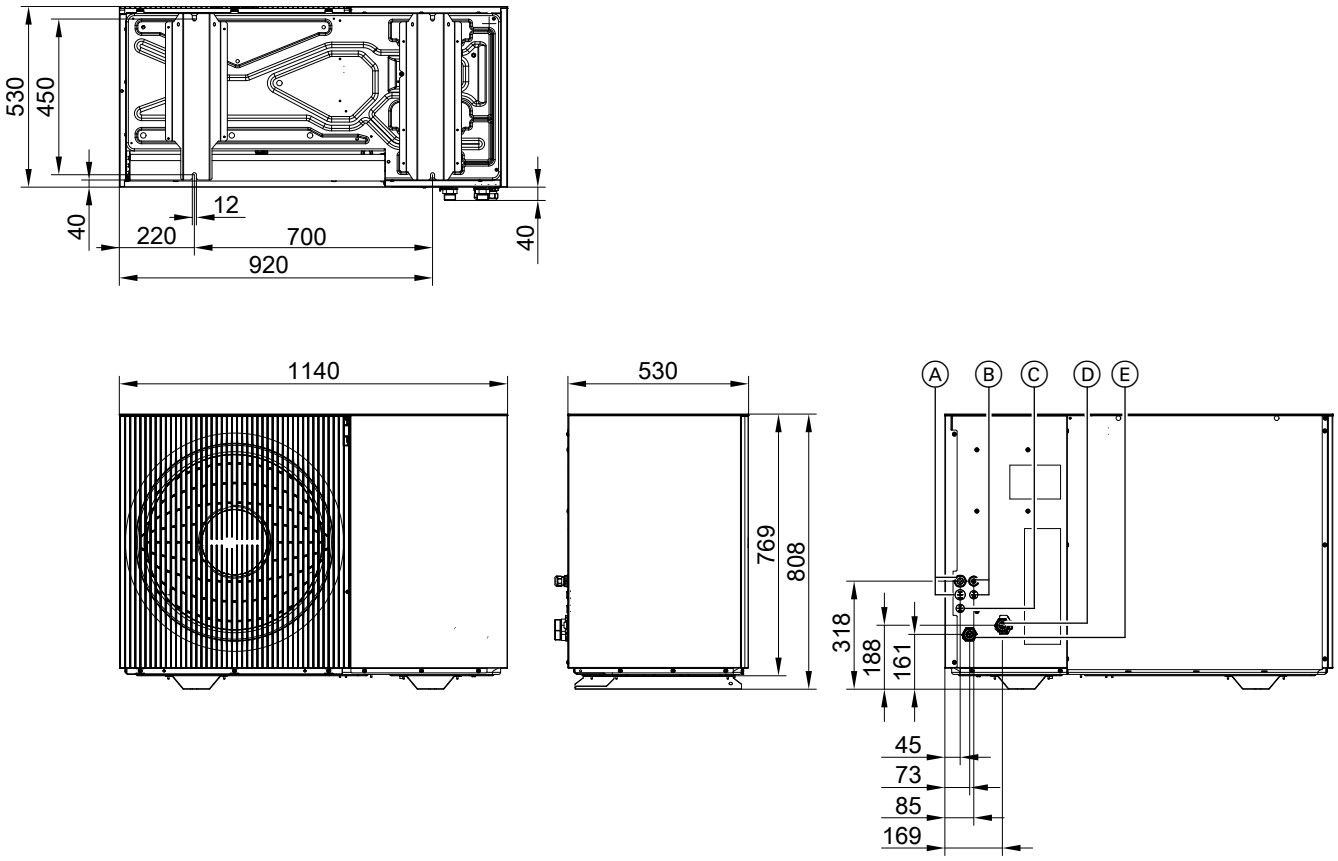

Fig. 1

Ⓐ Power cables
Ⓑ CAN bus communication cables (accessories)
Ⓒ Connecting cable for electric ribbon heater in condensate pan (accessories)
Ⓓ Heating water flow
Ⓔ Heating water return

Requirements for on-site connections (cont.)

Dimensions of Vitocal 200-A outdoor unit, sizes 10 to 12

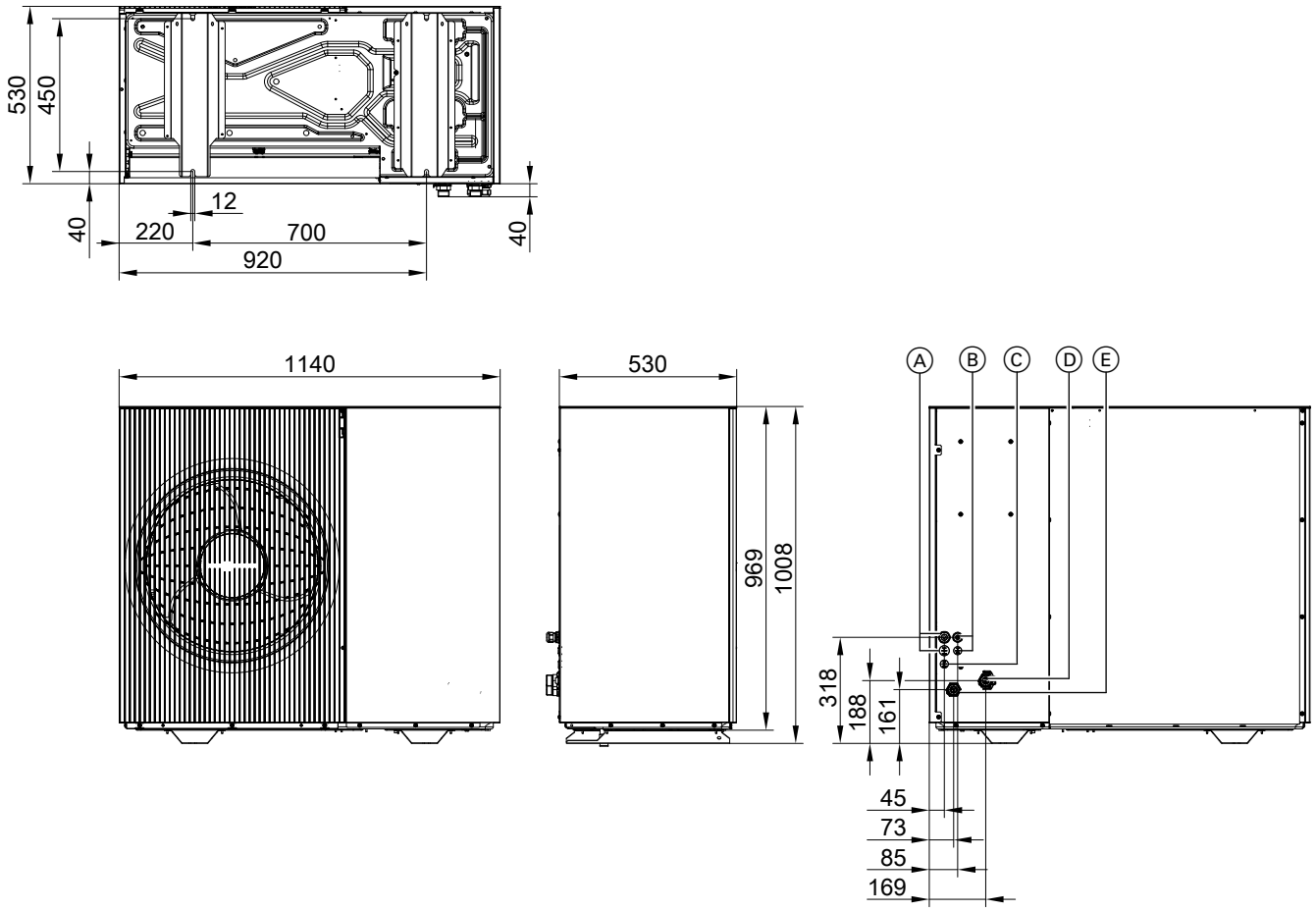

Fig. 2

Ⓐ Power cables
Ⓑ CAN bus communication cables (accessories)
Ⓒ Connecting cable for electric ribbon heater in condensate pan (accessories)
Ⓓ Heating water flow
Ⓔ Heating water return

Transporting the outdoor unit

Danger
The outdoor unit is filled with refrigerant R290 (propane): Mechanical stress can lead to leaks in the refrigerant circuit. If a refrigerant leak occurs, there is a risk of explosion and asphyxiation.
- Prevent vibration during transport.
- Set the outdoor unit down carefully after transport.
- Remove the packaging from the outdoor unit only after transporting.
- Do not remove the evaporator protection (cardboard, corner protectors) from the back of the outdoor unit until after final siting.
- Equipment damaged in transit should not be used.

Please note
Shock, pressure and tensile loads can damage the equipment.
- Do **not** apply loads/weight to the top, front or side panels of the appliance, or to the evaporator at the back of the appliance.
- Only transport the outdoor unit with a transport aid, transport and siting aid (accessories) or crane.

Please note
Scratches on the surface coating will lead to corrosion.
- If possible, only remove the packaging from the outdoor unit after transporting.
- Protect the outdoor unit against direct contact with tools and transporting equipment, e.g. using cardboard packaging or bubble wrap.

Please note
Excessive tilting of the outdoor unit will lead to equipment damage.
- Max. tilting angle: 45°
- Following transportation, wait at least 30 min before commissioning.

Please note
Stacking outdoor units can lead to appliance damage.
Only stack outdoor units during transportation and storage in accordance with the instructions on the packaging.
Information shown here: "Do not stack."

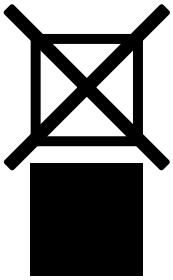

Note
The centre of gravity of the outdoor unit is marked with a ⌖.

Transporting with the transport and siting aid (accessories)

Installation and operating instructions for "Transport and siting aid"

Transport by crane

Danger
Incorrect unloading and transportation can result in damage to the outdoor unit. If damage to the refrigerant circuit occurs, there is the risk of explosion or asphyxiation.
- **Before** transport, check on-site aids, e.g. slings and boards, for damage.
- Take note of the weight of the outdoor unit: See chapter "Specification".
- Prevent vibration during transport.
- Avoid mechanical damage to the outdoor unit.

Do **not** commission outdoor units with transport damage.

1. Remove **outer** packaging from the outdoor unit before transport.
   Do not remove the evaporator protection (cardboard) from the back of the outdoor unit until after final siting.
2. Protect the entire evaporator at the back of the outdoor unit from damage.
   Do not remove the factory-installed evaporator protection (cardboard, corner protectors) at the back of the outdoor unit until **after** final siting.
3. Position the edge protection profiles on site at the front and rear upper edges of the outdoor unit.
   Guide the slings correctly through the outdoor unit supports: See Fig. 3.

Transporting the outdoor unit (cont.)

4. After transportation, set the outdoor unit down carefully. Remove the remaining packaging from the outdoor unit.

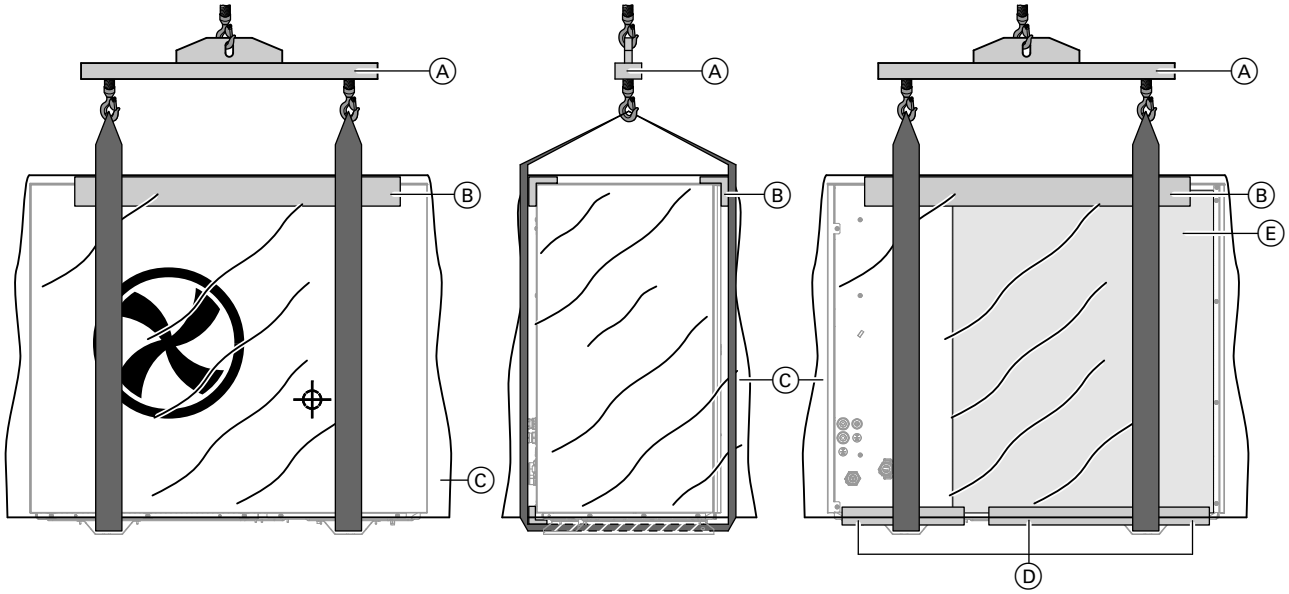

Fig. 3

Ⓐ Lifting beam
Ⓑ Wooden board (on site)
Ⓒ Protective wrap
Ⓓ Edge protection (factory-installed, with locating pins)
Ⓔ Box (factory-assembled)

Installation information

! **Please note**
Excessive tilting of the outdoor unit will lead to equipment damage.
- Max. tilting angle during siting and installation: 45°
- Following siting and installation, wait at least 30 min before commissioning.

The height differential between the hydraulic connections of the outdoor unit and the indoor unit must not exceed 15 m.

Floorstanding installation

- To ensure safe operation of the outdoor unit, take into account the weather conditions at the installation site, particularly snow depths and the amount of water accumulation.
  Recommended standard value for the distance to the substrate: At least 300 mm
- Secure the outdoor unit with a floor mounting bracket (accessories) to a concrete foundation.
  Use ground anchors with a tensile force of at least 2.5 kN to secure the support to the foundation.
- If the bracket cannot be used, site the outdoor unit on a concrete foundation ≥ 150 mm high using an anti-vibration base (accessories).
  If the outdoor unit is installed under a snow-free awning (e.g. a carport), a lower base can be used.
- Take the weight of the outdoor unit into account: See chapter "Specification".

Installation information (cont.)

Wall mounting

- Use the wall mounting bracket set (accessories).
- The wall must meet the structural requirements. Use suitable fixing materials, depending on the wall structure.
- If there is no level access to the outdoor unit, ensure it is easily accessible all year round for service and maintenance. Provide sufficient maintenance areas. Install suitable protection equipment, e.g. fall protection.

Roof installation

Flat roof installation

Note
Due to the higher static loads (roof/wind load) and the higher acoustic requirements for roof installation, the structural calculations and sound concept require input from specialist design engineers.

If the outdoor unit is to be installed on a flat roof, in addition to the requirements for floor and wall installation, the planning measures to be taken into account include the following:

- As the outdoor unit is located higher up when installed on a flat roof, operating noise propagation is more intense than when the unit is installed on the ground. Roof surfaces are normally more reverberant than areas on the ground.
  To prevent noise nuisance, install the outdoor unit at a sufficient distance from neighbouring buildings. If required, provide suitable noise reduction measures. Take into account sound reflection from the surfaces of buildings when analysing sound propagation: See technical guide.
- Provide on-site wind protection measures if required, e.g. screens, walls, etc.
- Check to ensure that the installed height of the outdoor unit does not exceed the permissible building height, e.g. as specified in outline planning restrictions.
- Provide easy, year-round access to the outdoor unit for service and maintenance. Provide sufficient maintenance areas which comply with the safety regulations.
  Install suitable protection equipment which complies with the safety regulations, e.g. anchorage points.
- Recommendation: Install the heat pump on a steel-reinforced concrete roof
- Installation on flat roofs with a low weight per unit area (e.g. roofs made from timber rafters or trapezoidal sheet metal) is **not permissible**.
- With flat roof installation, considerable wind loads may occur, depending on the relevant wind zone and the height of the building. Have the substructure designed according to DIN 1991-1-4 by a specialist design engineer.
- The higher roof and wind loads must be taken into account in the structural calculations and the fixture system of the outdoor unit.
  It is essential to comply with the specifications provided by the design engineer with regard to statics, distances from building edges and the sound concept.
- Where design casings are concerned, check that these are able to withstand wind and snow loads. Some of the design casings are only attached to the outdoor unit by means of magnets.

Pitched roof installation

Recommendation: Installation on floor, wall or flat roof. If the outdoor unit is nevertheless installed on a pitched roof, the same requirements apply as for flat roof installation.

Installation information (cont.)

Siting

- In accordance with EN 378-3, the outdoor unit may only be installed outside.
- The refrigerant circuit in the outdoor unit contains easily flammable refrigerant belonging to safety group A3 according to ANSI/ASHRAE Standard 34. Therefore a safety zone is defined in the immediate vicinity of the outdoor unit, in which special requirements apply: See chapter "Safety zone".
- Observe the information regarding noise levels.
- When siting the heat pump, distances to neighbouring properties must comply with applicable regulations.
- Do not install with the discharge side facing towards the house wall or against the main wind direction.
- During defrosting, cool vapour escapes from the air discharge vents of the outdoor unit. This vapour discharge must be taken into consideration during installation (choosing the installation location, orientation of the heat pump).
- Provide wall outlets and protective conduits for the hydraulic connection lines and electrical connecting cables without moulded parts or changes of direction.
  Building entry points, whether below or above ground level, must be sealed in accordance with current engineering standards. Safety zone requirements must be observed in all cases.
- Provide equipment for the protection of the outdoor unit against mechanical damage, e.g. impact damage from footballs.
- Take environmental and weather influences into account in the selection of the installation location, e.g. flooding, wind, snow, ice damage, etc. Install suitable protection equipment if necessary.

Siting in garages, multi-storey car parks and car parking areas:

- Prior to installation, it must be established for the case in question whether the installation is permissible under local garage and parking area regulations (German regulations GaStellV, GaStplVO, BetrVO).
- Systems with refrigerants belonging to safety group A3 must be fitted with impact protection. This impact protection must be designed so that a strike by a vehicle at the applicable maximum speed does not result in damage to the refrigerant circuit.
- Mark the outdoor unit safety zone with prohibition notices to identify ignition sources.
- Siting in underground car parks is **not** permissible.

Siting in coastal areas: Distance < 1000 m

- In coastal areas salt and sand particles in the air increase the likelihood of corrosion:
  Site the heat pump where it is protected from direct onshore wind.
- If necessary provide a wind break on site. Observe the minimum clearances to the heat pump: See chapter "Minimum clearances".

Weather influences

- Observe wind loads when installing the unit on sites exposed to the wind.
- Fit the pipework exposed to the outdoor air outside the floor mounting bracket (accessories) with adequately thick thermal insulation in accordance with the German Buildings Energy Act (GEG):
  Minimum thickness of the insulation layer with a thermal conductivity of λ = 0.035 W/(m·K) at an average temperature of 40 °C

Pipework internal ∅	Min. thickness of insulation layer
≤ 22 mm	40 mm
> 22 mm	60 mm

- The thermal insulation must be UV-resistant.
- If a design casing for the floor mounting bracket (accessories) is used:
  For pipework inside the bracket, use the thermal insulation supplied.
- Incorporate the outdoor unit into the lightning protection system.
- Consider the heat absorbed (heating mode) and heat emitted (cooling mode) by the appliance when designing weatherproofing measures or an enclosure.

Condensate

Floorstanding and wall installation:

- Ensure that condensate can drain freely.
- Allow condensate to soak away into a gravel bed or a deep seepage layer.

Installation information (cont.)

- Alternatively, drain condensate through the waste water system (accessories). Observe frost protection.

  Danger
  If refrigerant gets into the waste water system (e.g. as a result of a leak in the refrigerant circuit), there is a risk of explosion.
  Only connect the condensate drain to the waste water system via a trap.
- For regions where the outside temperature regularly falls below 0 °C, we recommend fitting the condensate pan with an integral electric ribbon heater (accessories) in the outdoor unit.

Flat roof installation:
- Allowing the condensate to drain freely onto the roof surface is not permissible, as this may result in the formation of layers of ice. Layers of ice on the roof may prevent further condensate from draining freely, resulting in increased roof loads.
- Install the condensate pan with integral electric ribbon heater (accessories).
- To drain the condensate, connect the condensate hose on the outdoor unit to an insulated condensate pipe. The condensate hose is part of the standard delivery of the electric ribbon heater for the condensate pipe.
  If necessary, insert the condensate hose via a trap insert.

For further information on the condensate drain: See page 33 onwards.

Structure-borne noise insulation and vibration isolation between the building and outdoor unit

- Route cables/leads between the indoor and outdoor units so they are not stressed.
- Installation only on walls with a high weight per unit area (> 250 kg/m^2); in other words not on lightweight walls, roof structures, etc.
- Vibration isolation components are included in the standard delivery of the wall mounting bracket.
- Do not use additional anti-vibration mounts, springs, rubber mounts, etc.
- When installing the outdoor unit on roof surfaces, there is a risk that structure-borne noise and vibrations will be transmitted into the building.
  If the outdoor unit is installed on freestanding garages, insufficient structure-borne noise insulation and vibration isolation can cause excessive noise due to resonance amplification.
- When using a KG conduit:
  After installing the hydraulic connection lines, fill the KG conduit with sand.

Technical guide

Installation location

- Maximum geographical height of the installation location: 2000 m above sea level
- Select a site with good air circulation so that the cooled air can dissipate and be replaced by warm air.
- Do not install in recesses or between walls. This could result in an "air short circuit" between the air being discharged and the air being drawn in.

  Please note
  An air short circuit during **heating mode** will result in the cooled, discharged air re-entering the unit. This can result in reduced heat pump efficiency and defrosting problems.
  Avoid air short circuits.

  Please note
  An air short circuit during **cooling mode** will result in the heated, discharged air re-entering the unit. This can lead to high pressure faults.
  Avoid air short circuits.

Installation location (cont.)

- If siting the appliance in a location that is exposed to wind, ensure that the wind cannot influence the fan area. Strong wind can have a negative influence on the air flow through the evaporator.
- Select an installation location where the evaporator cannot be blocked by leaves, snow, etc.
- Install the outdoor unit outside the area at risk of snowfall from roofs.
- Select the installation location giving due consideration to the physical laws of sound propagation and reflection.

  Technical guide
- Do not install above cellar shafts or floor troughs.
- Do not install near bedroom windows.
- To avoid increased wind loads, maintain 1 m distance from building edges and corners.
- Maintain a clearance of at least 3 m to pathways, downpipes or sealed surfaces. The cooled air in the discharge area creates a risk of ice forming when outside temperatures are below 10 °C.
- The installation location must be easily accessible, for example for maintenance work: See chapter "Minimum clearances".

Additional requirements for flat roof installation:

- Never install the outdoor unit on a flat roof immediately next to or above living rooms or bedrooms.
- Do not locate in front of windows, or keep a distance of 1 m from them.
- Due to the higher static loads (roof/wind load) and the higher acoustic requirements for roof installation, input from a specialist design engineer is required. The specialist design engineer specifies the requirements for structural calculations, distances from building edges and sound concepts.

Minimum clearances

Minimum clearances for 1 outdoor unit

Note

Siting the outdoor unit in a recess with 3 adjacent walls leads to higher sound reflection and therefore to high sound pressure levels.

Recommended installation versions:

- *Freestanding installation*
- *Installation in front of a wall*
- *Corner installation*

Minimum clearances (cont.)

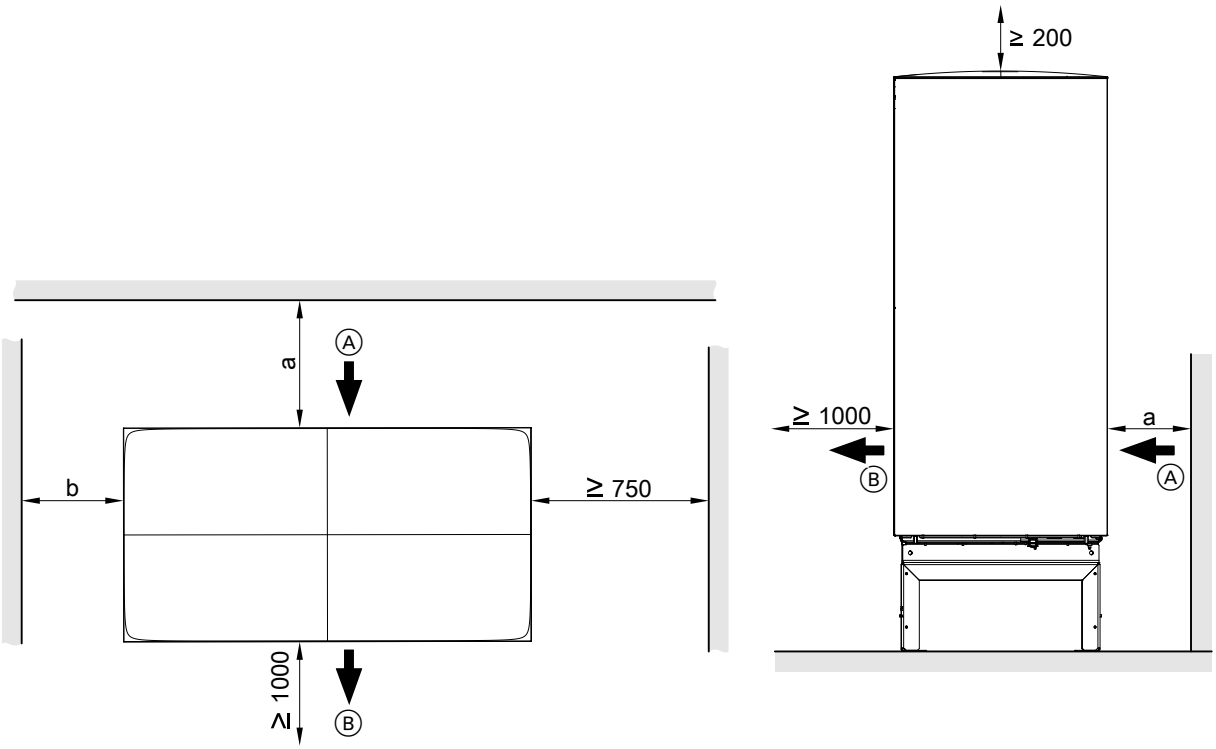

Fig. 4

Ⓐ Air inlet
Ⓑ Air outlet

a Wall clearance depends on line routing:
- Line entry **above** ground level: ≥ 300 mm
- Line entry **below** ground level when laying the Quattro connection line in a **straight trench**:
  - Quattro connection line made from corrugated stainless steel pipe: ≥ 300 mm
  - Quattro connection line made from PE: ≥ 940 mm
- Line entry **below** ground level when laying the Quattro connection line in a **trench with a bend**: ≥ 300 mm

b Wall clearance depends on the means of transport:
- Transport aid: ≥ 500 mm
- Transport and siting aid (accessories): ≥ 2500 mm

6260605

Minimum clearances (cont.)

Minimum clearances for a heat pump cascade (max. 4 outdoor units)

Facing layout without partition wall

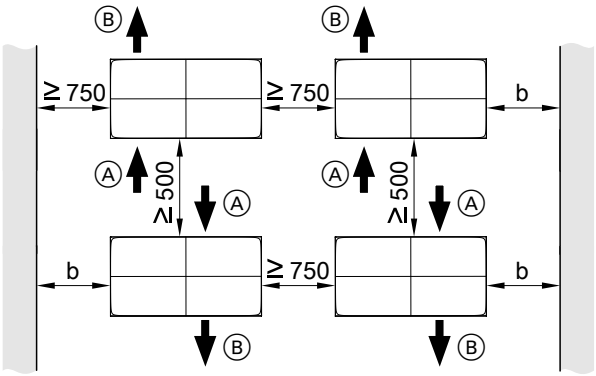

Fig. 5

Ⓐ Air inlet
Ⓑ Air outlet
b Wall clearance depends on the means of transport:
- Transport aid (standard delivery): ≥ 500 mm
- Transport and siting aid (accessories): ≥ 2500 mm

Facing layout with partition wall

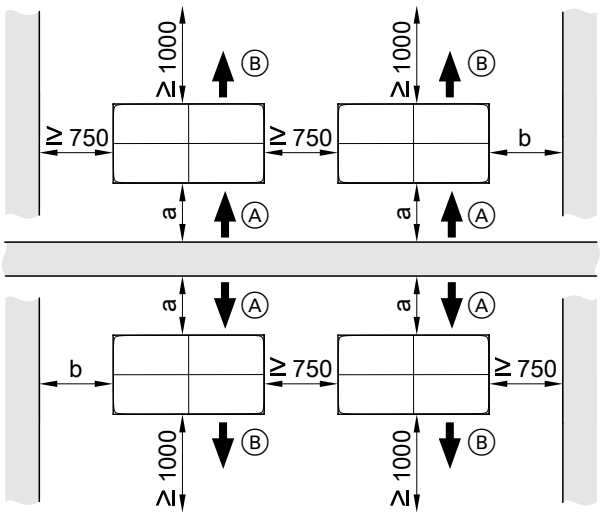

Fig. 6

Ⓐ Air inlet
Ⓑ Air outlet
a Wall clearance depends on line routing:
- Line entry **above** ground level: ≥ 300 mm
- Line entry **below** ground level when laying the Quattro connection line in a **straight trench**:
  - Quattro connection line made from corrugated stainless steel pipe: ≥ 300 mm
  - Quattro connection line made from PE: ≥ 940 mm
- Line entry **below** ground level when laying the Quattro connection line in a **trench with a bend**: ≥ 300 mm

b Wall clearance depends on the means of transport:
- Transport aid (standard delivery): ≥ 500 mm
- Transport and siting aid (accessories): ≥ 2500 mm

Single row layout

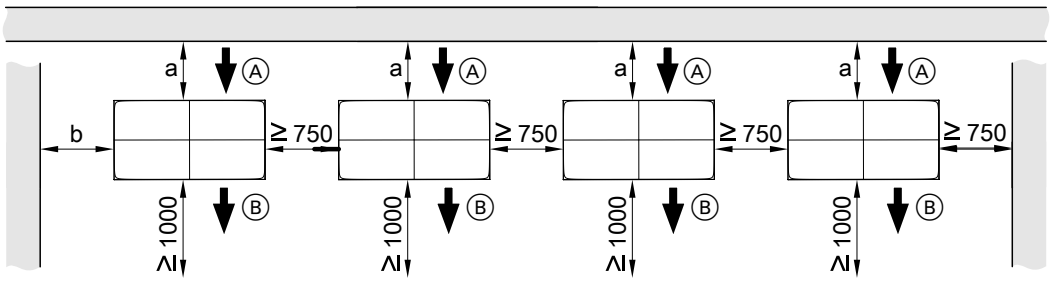

Fig. 7

Ⓐ Air inlet
Ⓑ Air outlet

Minimum clearances (cont.)

a Wall clearance depends on line routing:
- Line entry **above** ground level:
  ≥ 300 mm
- Line entry **below** ground level when laying the Quattro connection line in a **straight trench**:
  - Quattro connection line made from corrugated stainless steel pipe:
    ≥ 300 mm
  - Quattro connection line made from PE:
    ≥ 940 mm
- Line entry **below** ground level when laying the Quattro connection line in a **trench with a bend**:
  ≥ 300 mm

b Wall clearance depends on the means of transport:
- Transport aid (standard delivery): ≥ 500 mm
- Transport and siting aid (accessories):
  ≥ 2500 mm

Safety zone

The refrigerant circuit in the outdoor unit contains easily flammable refrigerant from safety group A3, as set out in ISO 817 and ANSI/ASHRAE Standard 34. Therefore a safety zone is defined in the immediate vicinity of the outdoor unit, in which special requirements apply.

The following conditions must not be present or occur within the safety zone:
- Openings:
  - Building openings, e.g. windows, doors, light wells, flat roof windows
  - Outdoor air and exhaust air apertures from ventilation and air conditioning systems
  - Pump shafts, inlets to waste water systems, downpipes and waste water shafts, etc.
  - Other slopes, troughs, depressions, shafts
- Property boundaries, neighbouring properties, footpaths and driveways
- Electrical house supply connections
- Electrical systems, sockets, lamps, light switches
- Snowfall from roofs

Requirements if other heat pumps are installed in the vicinity:
- Only outdoor units of the same type and with the same refrigerant from safety group A3, as set out in ISO 817 and ANSI/ASHRAE Standard 34, may be installed within the safety zone. The total safety zone results from the overlap of all safety zones.
- The following heat pumps must be sited outside the safety zone:
  - Heat pumps of a different type
  - Heat pumps with different refrigerant
  - Heat pumps from another manufacturer

Do not introduce ignition sources into the safety zone, e.g.:
- Naked flames or burner gauze assemblies
- Tools that generate sparks
- Electrical devices not free of ignition sources, mobile devices with integrated batteries
- Objects with temperatures above 360 °C

Note
The particular safety zone is dependent on the surroundings of the outdoor unit.
- *The safety zones for floorstanding installation described below also apply to wall and roof mounting.*
- *In the case of wall installation, the requirements listed above also apply to the area **below** the outdoor unit, down to the ground.*
- *If openings in the safety zone cannot be avoided, the following measures are required:*
  - *Seal the openings to make them permanently gas-tight. The openings may only be opened with a tool.*
    Or
  - *Install a permanent, gas-tight barrier between the outdoor unit and any openings, e.g. a wall or partition.*
    Observe the note on the floor area of the safety zone.

Floor area of safety zone
If necessary, it is possible to deviate from the dimensions of 1000 mm to the side and 1800 mm to the front. Please note the following:
- *There **must** be a safety zone to the front and side.*
- *The floor area of the safety zone **must** be observed.*

6260605

Safety zone (cont.)

Safety zones for individual outdoor units

Freestanding installation

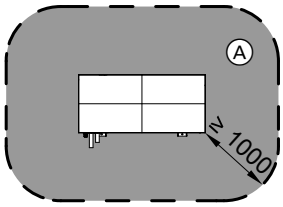

Fig. 8

Ⓐ Safety zone

Floorstanding installation against external walls

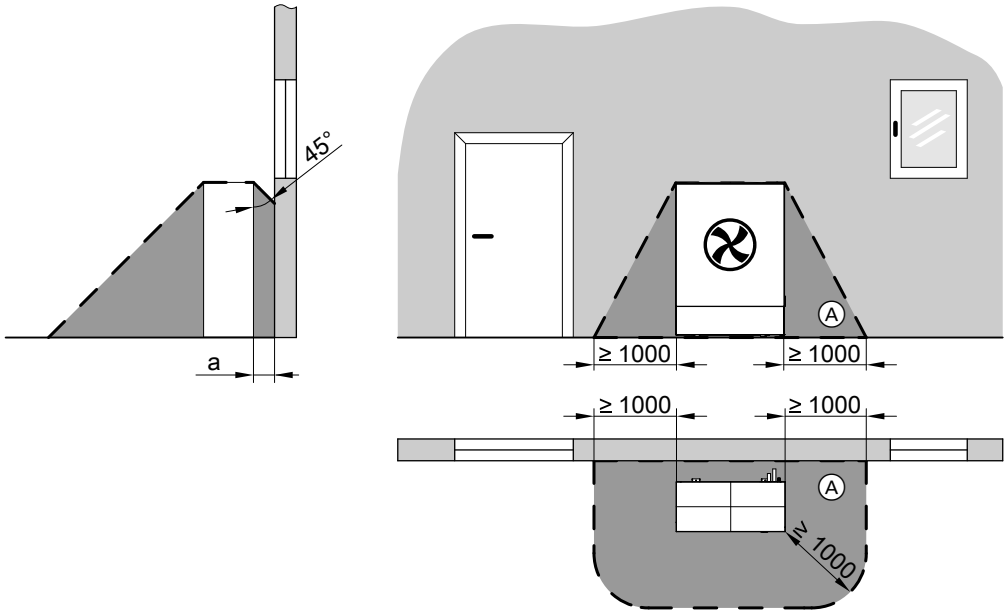

Fig. 9

Ⓐ Safety zone

Safety zone (cont.)

Wall mounted outdoor unit

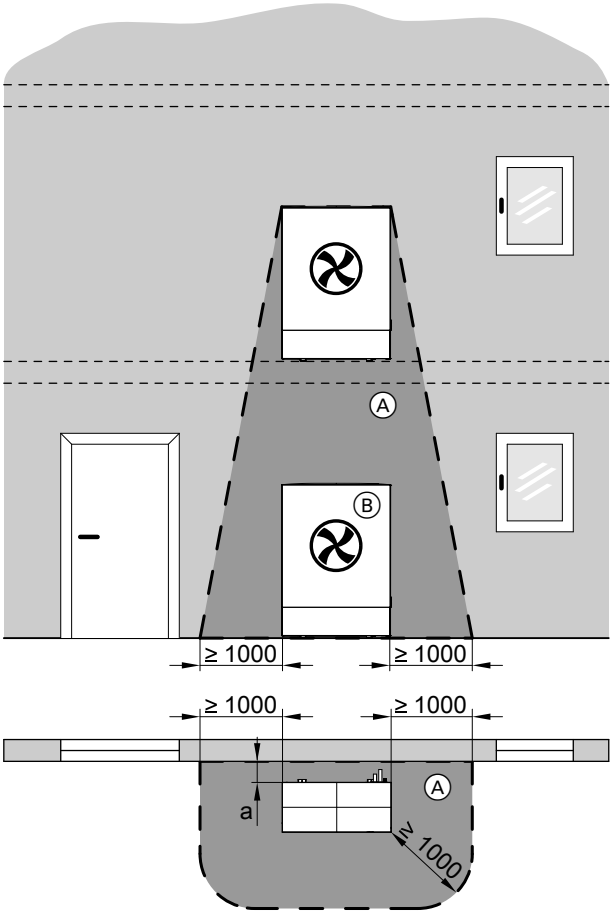

Fig. 10

Ⓐ Safety zone
Ⓑ Other heat pump in the immediate vicinity
a See chapter "Minimum clearances".

Safety zone (cont.)

Floorstanding corner arrangement of the outdoor unit, right

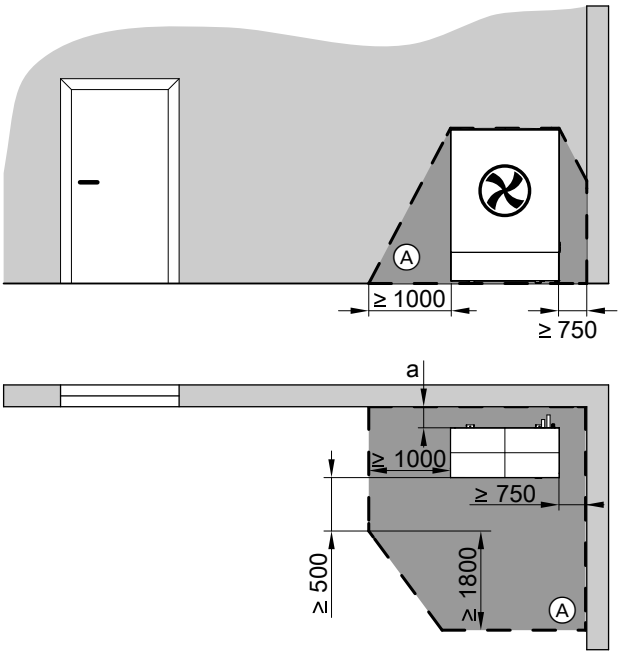

Fig. 11

Ⓐ Safety zone
a See chapter "Minimum clearances".

Floorstanding corner arrangement of the outdoor unit, left

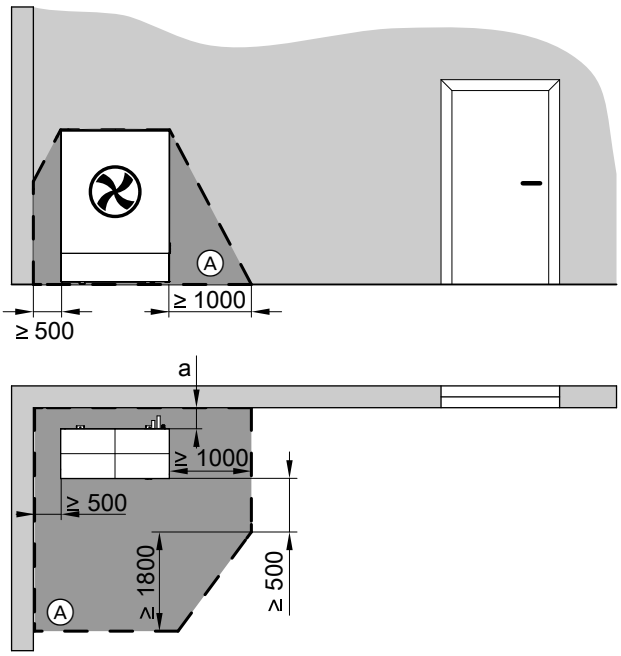

Fig. 12

Ⓐ Safety zone
a See chapter "Minimum clearances".

Safety zone (cont.)

Safety zones for a heat pump cascade (max. 4 outdoor units)

- The requirements for the safety zone apply equally to heat pump cascades.
- Positioning the air outlet sides opposite each other is **not** permissible.
  Air outlet sides: See pos. Ⓒ in the following diagram.
- Positioning in corners, recesses or on walls may restrict performance.

The safety zone for the installation of 2 outdoor units is shown below. If 3 to 4 outdoor units are installed, the safety zone is larger. The distance shown between the two outdoor units must then be maintained in relation to the adjacent outdoor unit.

Freestanding positioning of the outdoor units

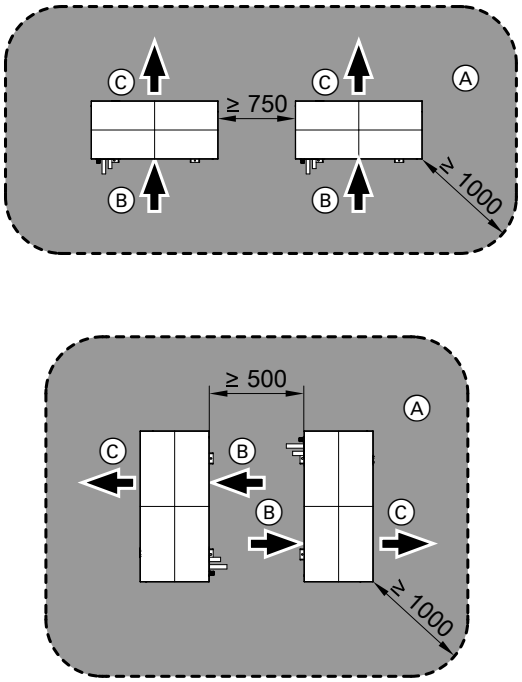

Fig. 13

Ⓐ Safety zone
Ⓑ Air inlet
Ⓒ Air outlet

Positioning the outdoor units against external walls: Examples of parallel arrangement

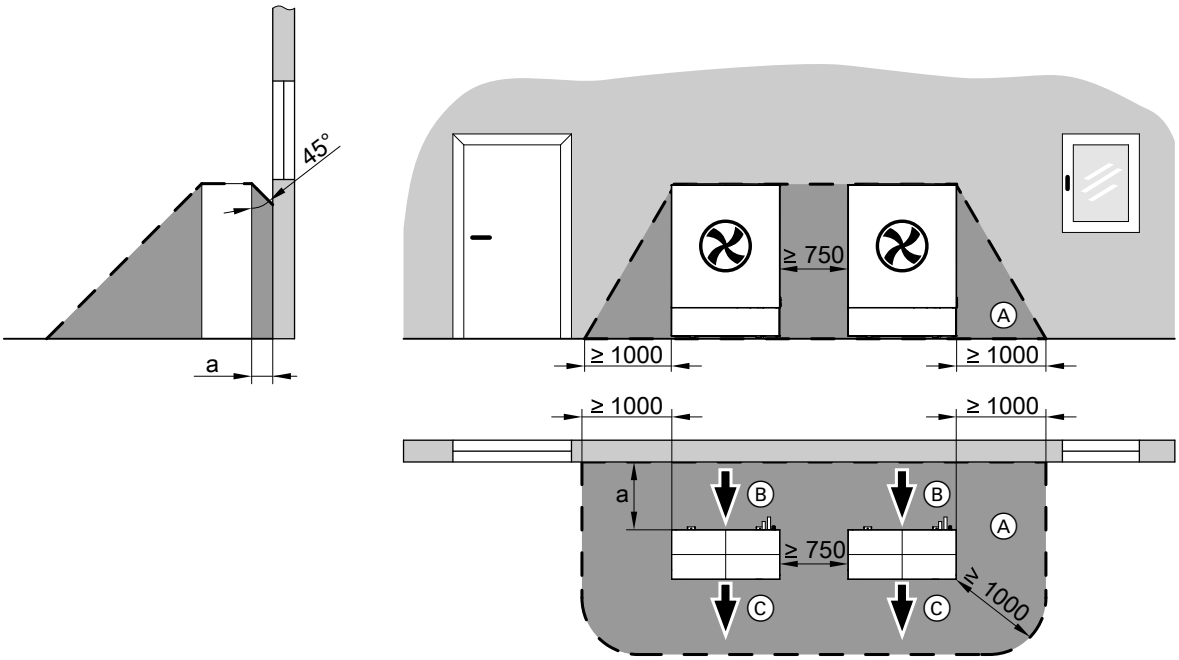

Fig. 14

Ⓐ Safety zone
Ⓑ Air inlet
Ⓒ Air outlet
a See chapter "Minimum clearances".

6260605

Safety zone (cont.)

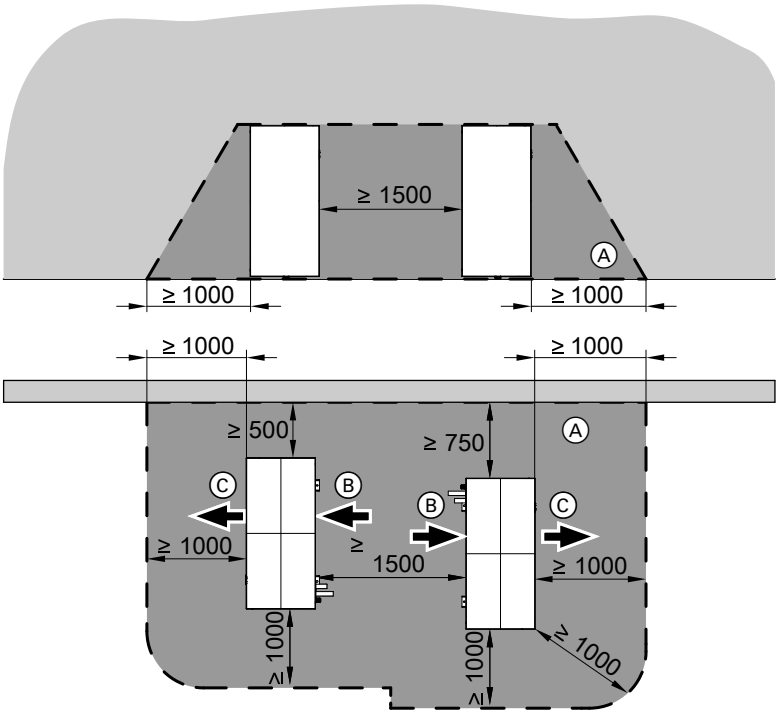

Fig. 15

Ⓐ Safety zone
Ⓑ Air inlet
Ⓒ Air outlet

Positioning the outdoor units against external walls: Examples of opposite arrangement

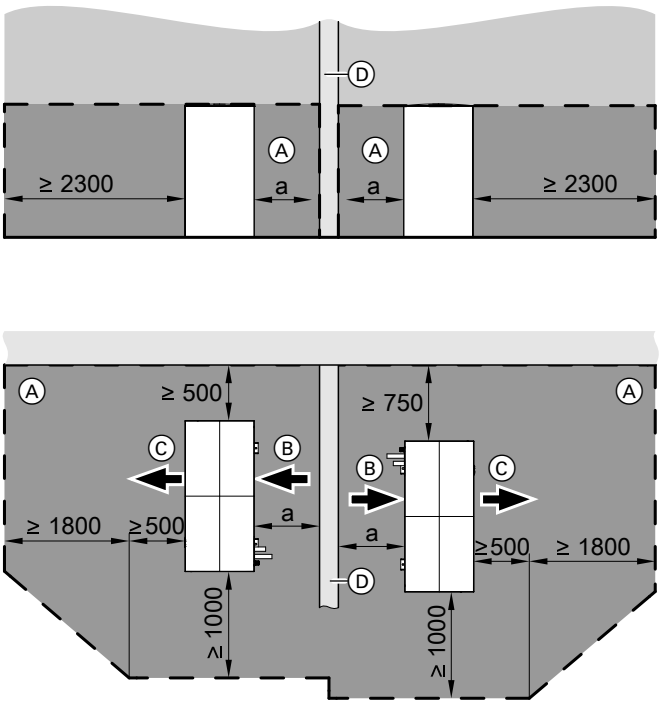

Fig. 16

Ⓐ Safety zone
Ⓑ Air inlet
Ⓒ Air outlet
Ⓓ Partition wall
a See chapter "Minimum clearances".

Installation

6260605

Safety zone (cont.)

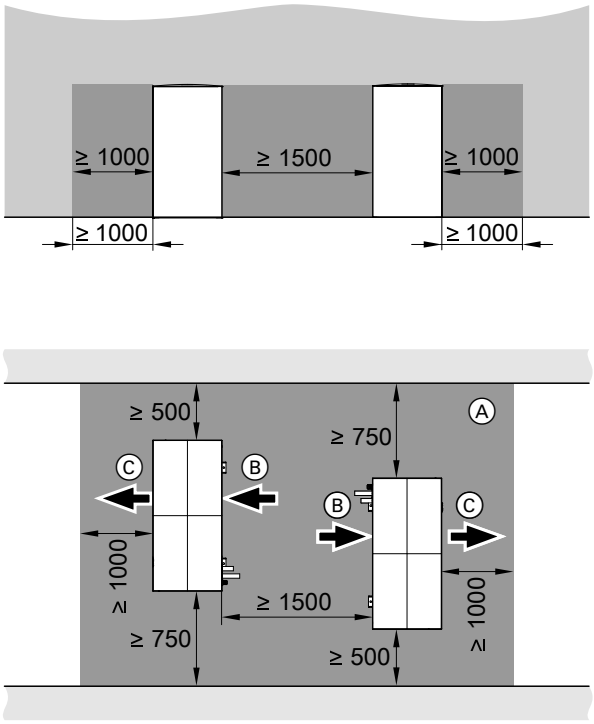

Fig. 17

Ⓐ Safety zone
Ⓑ Air inlet
Ⓒ Air outlet

Positioning the outdoor units against external walls: Examples of corner arrangement

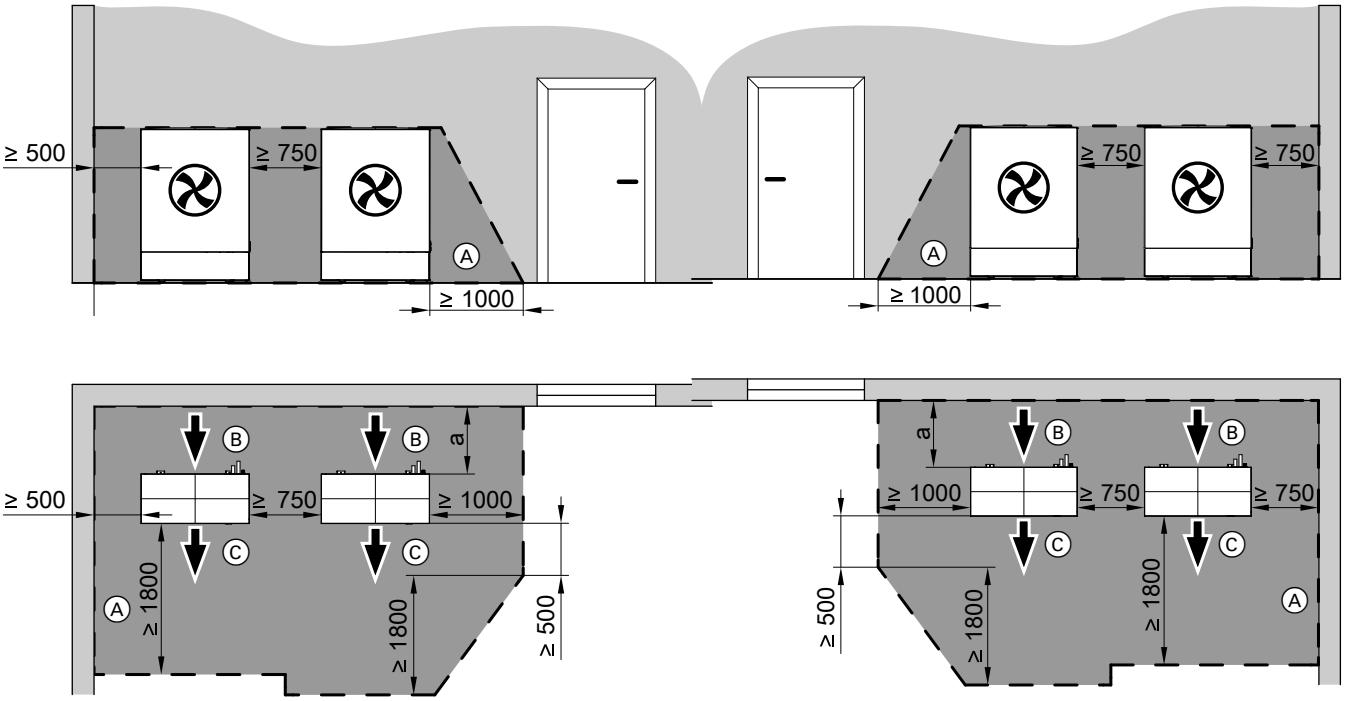

Fig. 18

Fig. 19

Ⓐ Safety zone
Ⓑ Air inlet
Ⓒ Air outlet
a See chapter "Minimum clearances".

Ⓐ Safety zone
Ⓑ Air inlet
Ⓒ Air outlet
a See chapter "Minimum clearances".

6260605

Condensate drain

Free condensate drain without drain pipe

Allow the condensate to drain away freely **without** a drain pipe into a gravel bed beneath the outdoor unit.

Central condensate drain via drain pipe

The drain pipe can only be connected to the condensate pan (accessories).

Installation of the condensate pan:
Separate installation instructions

Note

- *To ensure correct function of the condensate drain even at low temperatures, provide a ribbon heater in the drain pipe (accessories).*
- *The dripping water that occurs during evaporator defrosting undergoes controlled discharge via the central drain (drain pipe, pos. Ⓕ).*
  During operation, condensate may form in other places in the outdoor unit and may escape from the appliance at other points.
  Recommendation: Provide a water-permeable substrate, such as drainage gravel or a lawn area, even when installing the electric ribbon heater for the condensate drain (accessories) below the outdoor unit.
  Installation on surfaces that are impermeable to water (e.g. paved areas) can lead to the formation of black ice and therefore to the risk of a fall.

Danger
Incorrect installation of the electric ribbon heater poses a fire hazard during operation.

- Avoid kinks in the electric ribbon heater.
- Avoid loops in the electric ribbon heater.
- Avoid routing the electric ribbon heater into standing water, e.g. in a siphon.

Central condensate drain via drain pipe in seepage layer

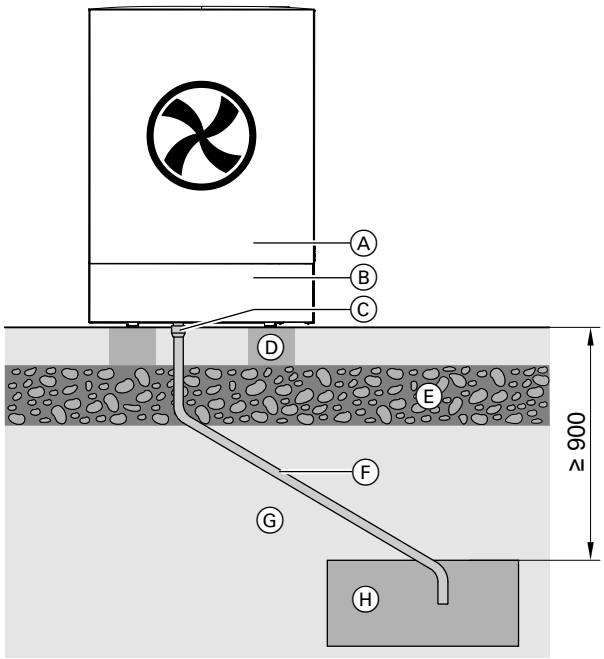

Fig. 20

Ⓐ Outdoor unit
Ⓑ Floor mounting bracket (accessories) with design casing (accessories)
Ⓒ Condensate drain connector
Ⓓ Foundation
Ⓔ Frost protection (compacted crushed stone)
Ⓕ Drain pipe (at least DN 40) with ribbon heater (accessories)
Ⓖ Ground
Ⓗ Seepage layer for removal of condensate

Condensate drain (cont.)

Central condensate drain via waste water system

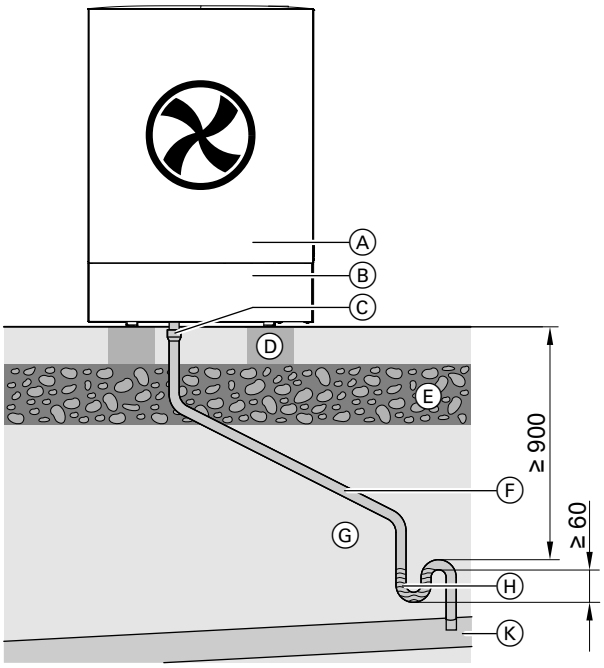

Fig. 21

Ⓐ Outdoor unit
Ⓑ Floor mounting bracket (accessories) with design casing (accessories)
Ⓒ Condensate drain connector
Ⓓ Foundation
Ⓔ Frost protection (compacted crushed stone)
Ⓕ Drain pipe (at least DN 40) with ribbon heater (accessories)
Ⓖ Ground
Ⓗ Trap in an area free from the risk of frost
Ⓚ Sewer

Foundations for floorstanding installation with bracket (accessories)

Danger
Incorrect installation can lead to equipment damage and personal injury, e.g. if the outdoor unit falls down or falls over.
Only install the outdoor unit in accordance with the specifications in these instructions.

Recommendation:
- Installation with prefabricated foundation (accessories)
  Or
- Construct concrete foundations in accordance with the following diagram (on site). The stated layer thicknesses are average values. These values should be adjusted to suit the local conditions. Observe the standard rules of building engineering.

Construct 2 horizontal foundation strips with a max. tilt tolerance of ±10 mm for every 1 m of length.

Foundations for floorstanding installation with… (cont.)

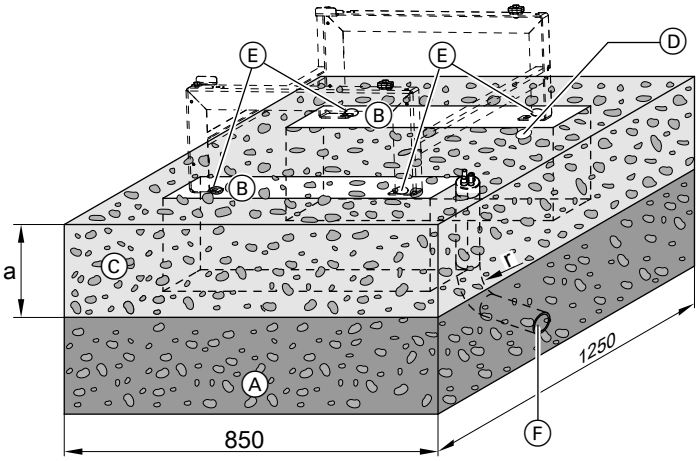

Fig. 22 Example: Concrete foundation on site

a
- Prefabricated foundation (accessories): 585 mm
- On-site foundation: 500 mm

r Bending radius
- Quattro connection line made from PE (accessories): ≥ 600 mm
- Quattro connection line made from corrugated stainless steel pipe (accessories): ≥ 250 mm

Foundations for floorstanding installation with… (cont.)

Prefabricated foundation (accessories)

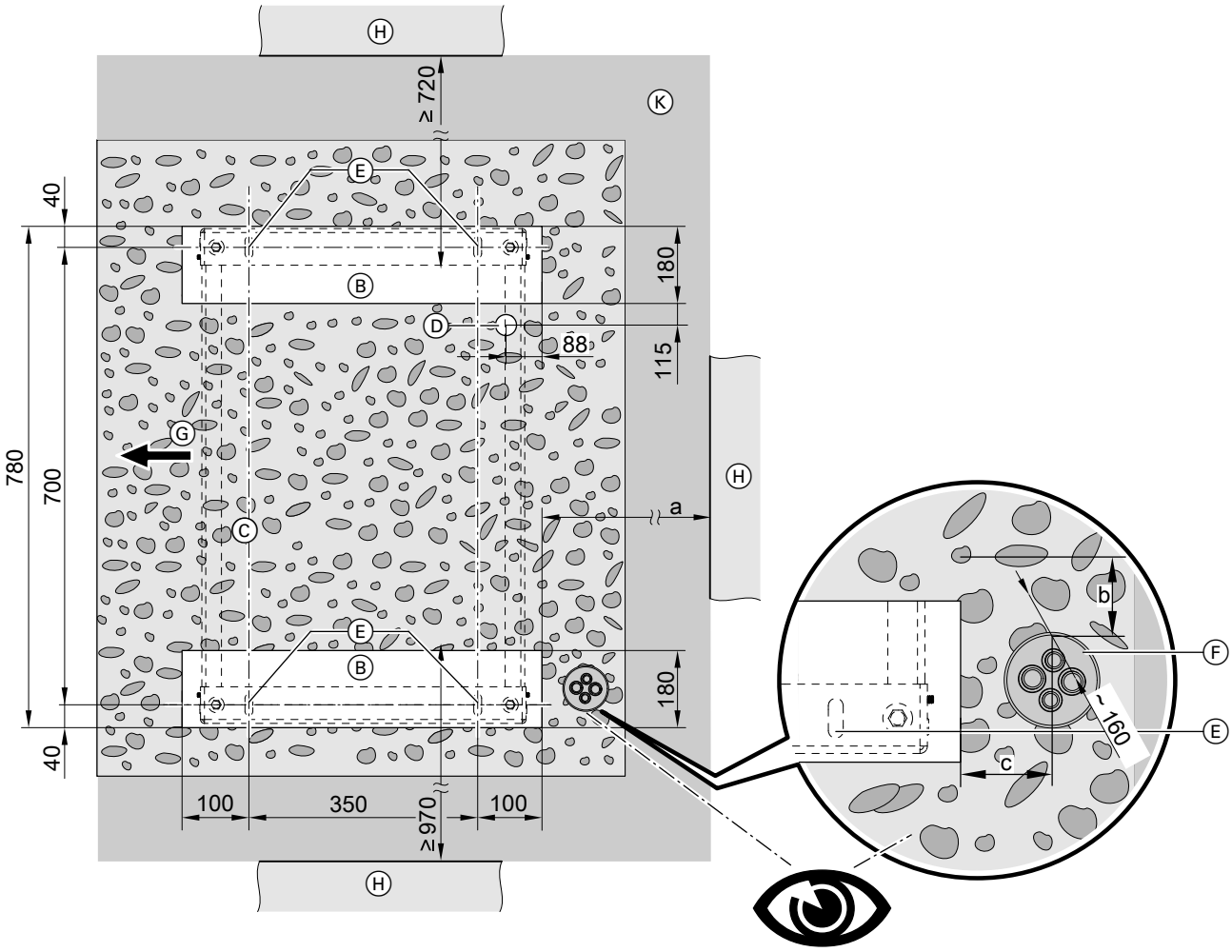

Fig. 23

Ⓐ Frost protection for foundations: Compacted crushed stone (e.g. 0 to 32/56 mm); thickness of layer subject to local requirements and building regulations

Ⓑ Prefabricated foundation

Ⓒ For free flowing condensate:
Gravel bed as soakaway
Or

Ⓓ In conjunction with central condensate drain and electric ribbon heater for condensate drain (accessories):
Drain pipe (min. DN 40) for draining condensate via waste water system or seepage layer

Ⓔ Fixing points for support:
Use ground anchors with a tensile force of at least 2.5 kN.

Ⓕ Quattro connection line (accessories) for use when cable/line entry is below ground level:
So that the floor mounting bracket connection set (accessories) can be used, align the flow and return of the Quattro connection line (accessories) flush with and parallel to the edge of the foundation.

Ⓖ Air outlet

Ⓗ Wall

Ⓚ Flexible separating layer between the foundations and the wall, in accordance with local requirements and the standard rules of building engineering

a, b, c Only for line entry below ground level: See the table.

Recommendation for the position of the Quattro connection line

Quattro connection line	PE	Corrugated stainless steel pipe
Installation in a straight trench		
▪ a	≥ 940 mm	≥ 300 mm
▪ b	250 mm	250 mm
▪ c	115	115

6260605

Foundations for floorstanding installation with… (cont.)

Quattro connection line	PE	Corrugated stainless steel pipe
Installation in a trench with a bend		
▪ a	≥ 250 mm	≥ 300 mm
▪ b	61 mm	61 mm
▪ c	115	115

Concrete foundation on site

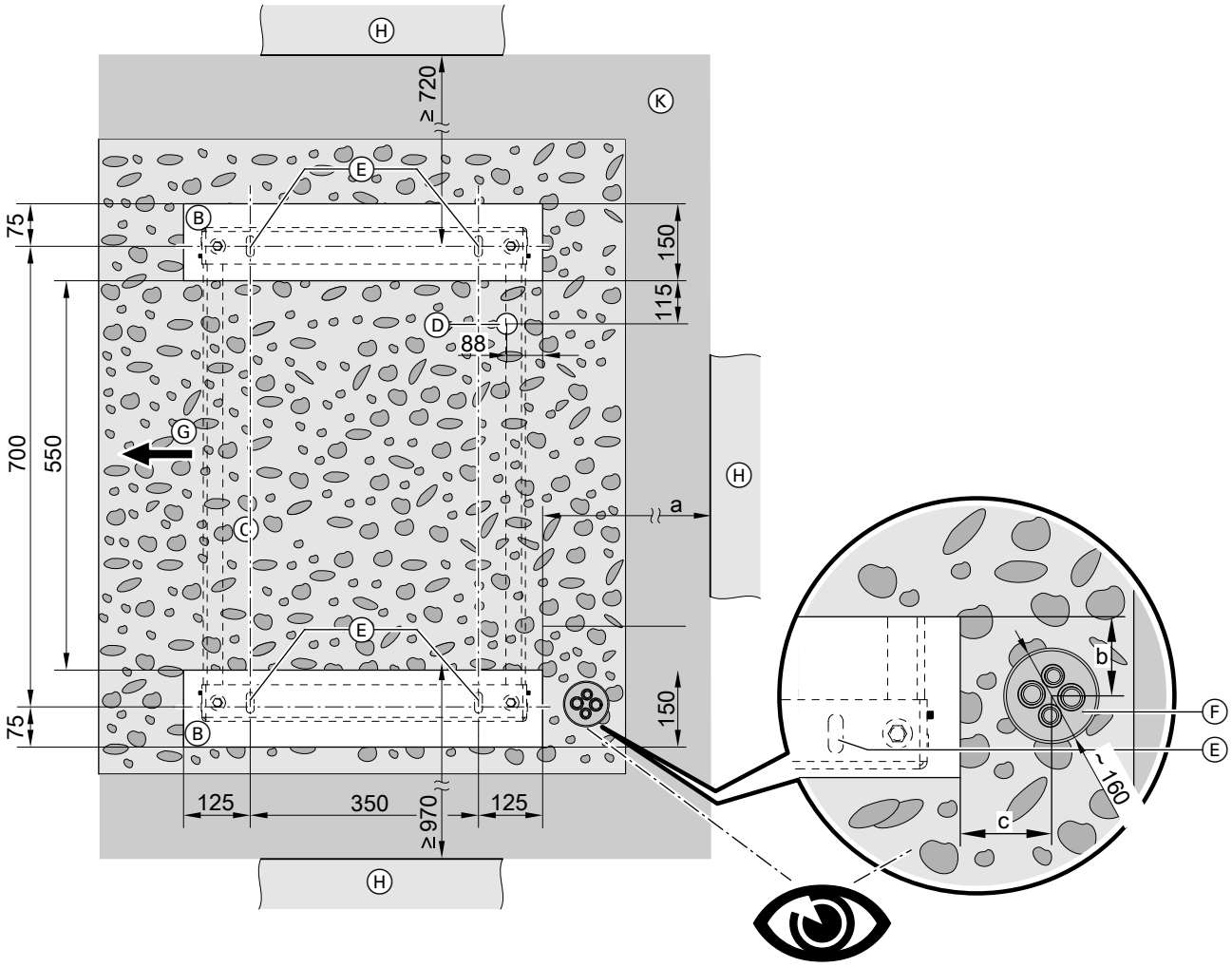

Fig. 24

Ⓐ Frost protection for foundations: Compacted crushed stone (e.g. 0 to 32/56 mm); thickness of layer subject to local requirements and building regulations

Ⓑ Foundation strip of reinforced concrete

Ⓒ For free flowing condensate:
Gravel bed as soakaway
Or

Ⓓ In conjunction with central condensate drain and electric ribbon heater for condensate drain (accessories):
Drain pipe (min. DN 40) for draining condensate via waste water system or seepage layer

Ⓔ Fixing points for support:
Use ground anchors with a tensile force of at least 2.5 kN.

Ⓕ Quattro connection line (accessories) for use when cable/line entry is below ground level:
So that the floor mounting bracket connection set (accessories) can be used, align the flow and return of the Quattro connection line (accessories) flush with and parallel to the edge of the foundation.

Ⓖ Air outlet

Ⓗ Wall

Ⓚ Flexible separating layer between the foundations and the wall, in accordance with local requirements and the standard rules of building engineering

a, b Only for line entry below ground level: See the table.

6260605

Foundations for floorstanding installation with… (cont.)

Recommendation for the position of the Quattro connection line

Quattro connection line	PE	Corrugated stainless steel pipe
Installation in a straight trench		
▪ a	≥ 940 mm	≥ 300 mm
▪ b	90 mm	90 mm
▪ c	25	25
Installation in a trench with a bend		
▪ a	≥ 250 mm	≥ 300 mm
▪ b	90 mm	90 mm
▪ c	25	25

Installation information for floor mounting bracket

- *Installation instructions for "Floor mounting bracket set".*
- *Use M10 x 80 ground anchors with a tensile force of at least 2.5 kN to secure the bracket.*

Note on the central condensate drain

The dripping water that occurs during evaporator defrosting undergoes controlled discharge via the central drain (drain pipe, pos. Ⓓ).
During operation, condensate may form in other places in the outdoor unit and may escape from the appliance at other points.
Recommendation: Provide a water-permeable substrate, such as drainage gravel or a lawn area, even when installing the electric ribbon heater for the condensate drain (accessories) below the outdoor unit.
Installation on surfaces that are impermeable to water (e.g. paved areas) can lead to the formation of black ice and therefore to the risk of a fall.

Foundations for floorstanding installation with anti-vibration base (accessories)

Recommendation: Construct concrete foundations in accordance with the following diagram. The stated layer thicknesses are average values. These values should be adjusted to suit the local conditions. Observe the standard rules of building engineering.

Provide 2 horizontal foundation strips.

- Max. tilt tolerance: ±10 mm for every 1 m of length

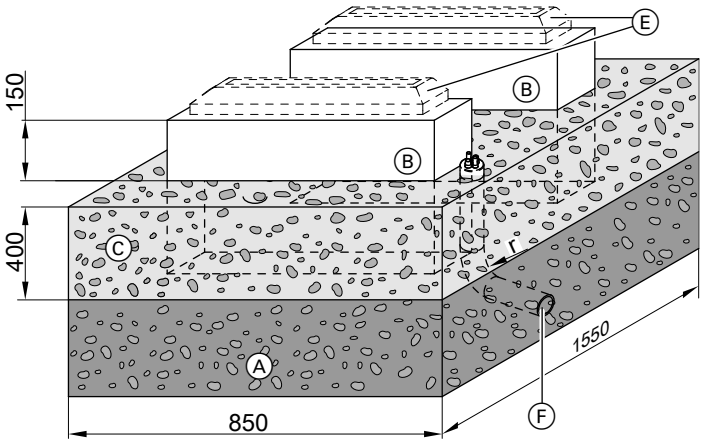

Fig. 25

r Bending radius
- Quattro connection line made from PE (accessories): ≥ 600 mm
- Quattro connection line made from corrugated stainless steel pipe (accessories): ≥ 250 mm

Foundations for floorstanding installation with… (cont.)

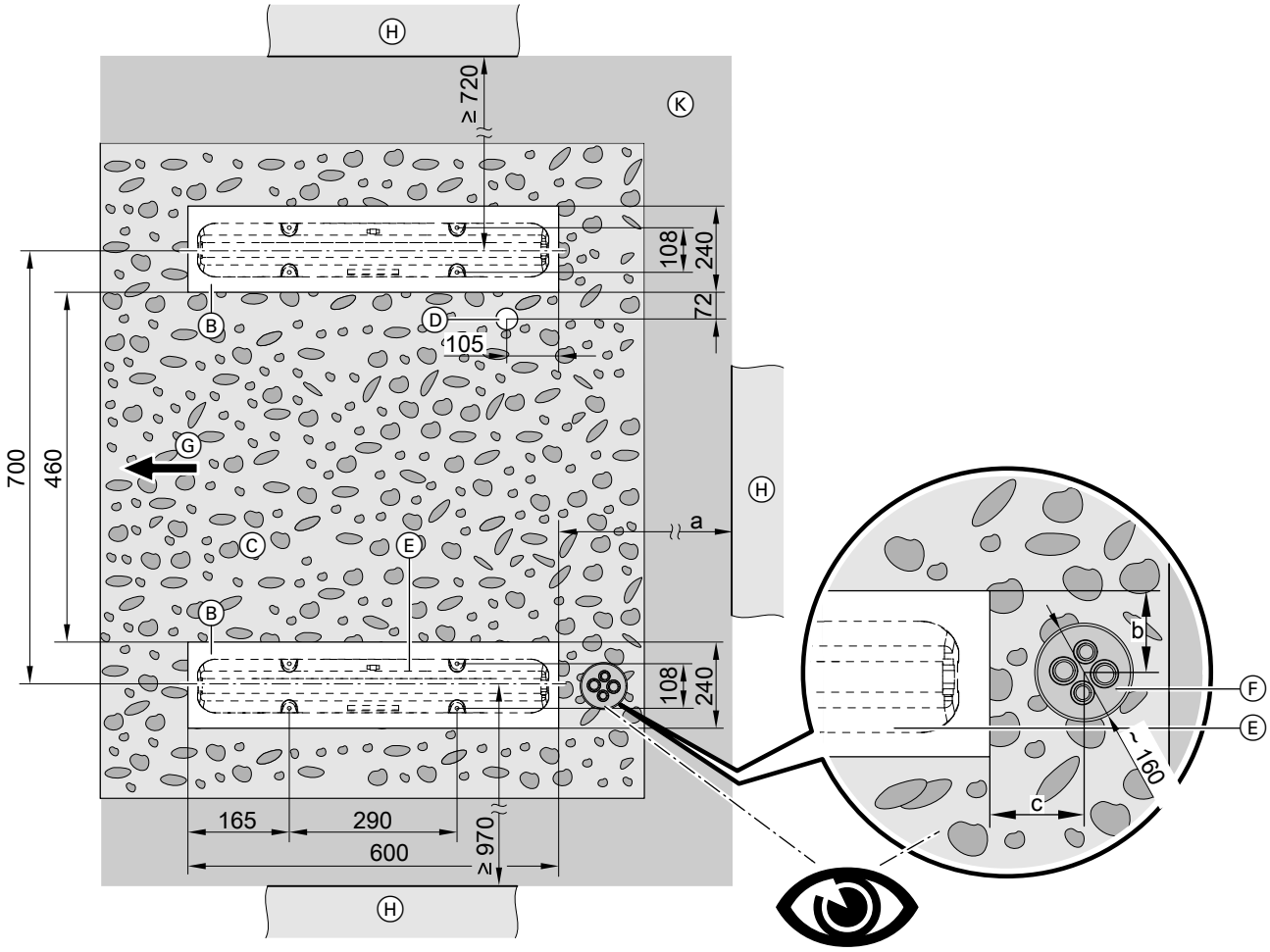

Fig. 26

Ⓐ Frost protection for the foundations: Compacted crushed stone, e.g. 0 to 32/56 mm; thickness of layer subject to local requirements and building regulations

Ⓑ Foundation strip of reinforced concrete

Ⓒ For free flowing condensate:
Gravel bed as soakaway
Or

Ⓓ In conjunction with central condensate drain and electric ribbon heater for condensate drain (accessories):
Drain pipe (min. DN 40) for draining condensate via waste water system or seepage layer

Ⓔ Anti-vibration base (accessories):
Observe installation instructions.

Ⓕ Quattro connection line (accessories) for use when cable/line entry is below ground level:
So that the floor mounting bracket connection set (accessories) can be used, align the flow and return of the Quattro connection line (accessories) flush with and parallel to the edge of the foundation.

Ⓖ Air outlet

Ⓗ Wall

Ⓚ Flexible separating layer between the foundations and the wall, in accordance with local requirements and the standard rules of building engineering

a, b, c Only for line entry below ground level: See the following table.

Recommendation for the position of the Quattro connection line

Quattro connection line	PE	Corrugated stainless steel pipe
Installation in a straight trench		
▪ a	≥ 940 mm	≥ 300 mm
▪ b	20 mm	20 mm
▪ c	105	105
Installation in a trench with a bend		
▪ a	≥ 250 mm	≥ 300 mm

Foundations for floorstanding installation with… (cont.)

Quattro connection line	PE	Corrugated stainless steel pipe
▪ b	20 mm	20 mm
▪ c	105	105

Installation instructions for anti-vibration base

- *Align the anti-vibration base horizontally on the foundation using the spirit levels supplied.*
- *Use tension rods with a tensile force of at least 1.25 kN per fixing point.*
- *Drill holes at the markings based on the nominal diameter of the tension rods.*
- *Increase bearing surface of screw heads or nuts with washer.*

Note on the central condensate drain

The dripping water that occurs during evaporator defrosting undergoes controlled discharge via the central drain (drain pipe, pos. Ⓓ).
During operation, condensate may form in other places in the outdoor unit and may escape from the appliance at other points.
Recommendation: Provide a water-permeable substrate, such as drainage gravel or a lawn area, even when installing the electric ribbon heater for the condensate drain (accessories) below the outdoor unit.
Installation on surfaces that are impermeable to water (e.g. paved areas) can lead to the formation of black ice and therefore to the risk of a fall.

Line entry below ground level

Installation in a straight trench using the Quattro connection line made from corrugated stainless steel pipe

Note

The following information applies to installation with a bracket and with an anti-vibration base. Installation with a bracket is shown as an example.

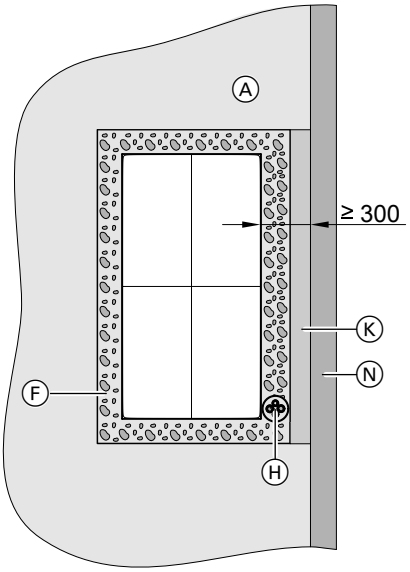

Fig. 27

Ⓐ Ground
Ⓕ For free drainage of condensate: Gravel bed as soakaway
Ⓗ Quattro connection line laid underground (accessories)
Ⓚ Flexible separating layer between the foundations and the wall
Ⓝ Wall

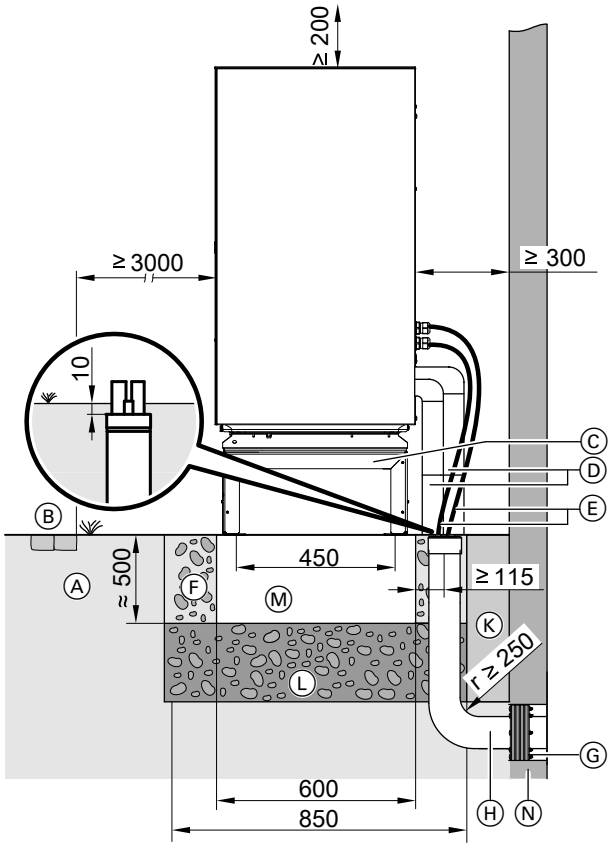

Fig. 28

Ⓐ Ground
Ⓑ Pathway, patio
Ⓒ Floor mounting bracket (accessories)

6260605

Line entry below ground level (cont.)

Ⓓ Connection set, floorstanding installation (accessories)
Ⓔ Indoor/outdoor unit CAN bus communication cable and outdoor unit power cable:
Route the cables free of strain.
Ⓕ For free drainage of condensate: Gravel bed as soakaway
Ⓖ Ring seal (accessories)
Ⓗ Quattro connection line laid underground (accessories)
Ⓚ Flexible separating layer between the foundations and the wall
Ⓛ Frost protection for foundations (compacted crushed stone, e.g. 0 to 32/56 mm); thickness of layer subject to local requirements and building regulations
Ⓜ Foundation strips
Ⓝ Wall

Further installation instructions for the Quattro connection line
Separate installation instructions

Note
- *Provide sufficiently thick thermal insulation for pipework that is exposed to the outdoor air: See table on page 21.*
- *Protect the pipework against damage. Avoid trip hazards.*

Laying lines in a trench with a bend

Note
The following information applies to installation with a bracket and with an anti-vibration base. Installation with a bracket is shown as an example.

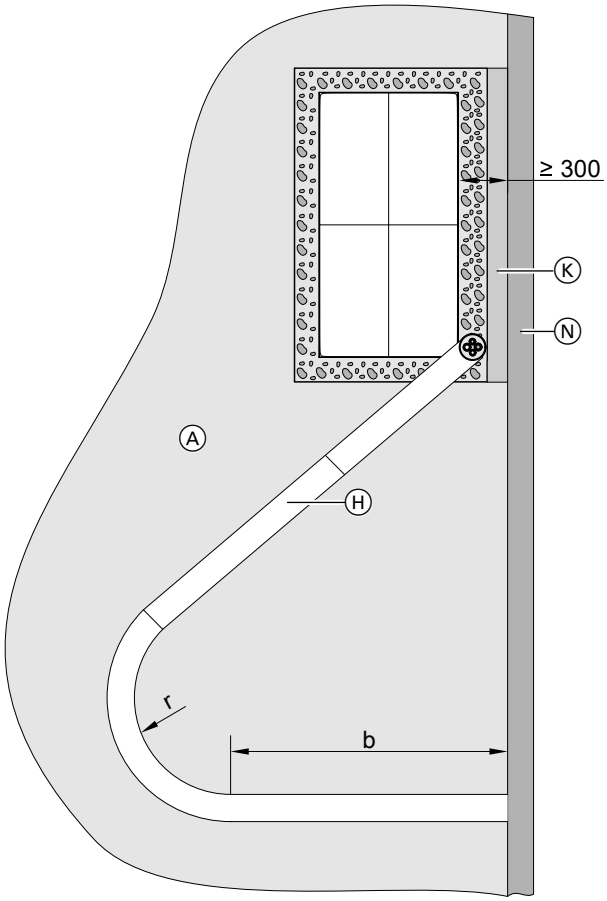

Fig. 29

Ⓐ Ground
Ⓗ Quattro connection line laid underground (accessories)
Ⓚ Flexible separating layer between the foundations and the wall
Ⓝ Wall
r Bending radius
- Quattro connection line made from PE (accessories): ≥ 600 mm
- Quattro connection line made from corrugated stainless steel pipe (accessories): ≥ 250 mm

6260605

Line entry below ground level (cont.)

Quattro connection line	PE	Corrugated stainless steel pipe
Installation in a trench with a bend		
▪ b	≥ 300 mm	≥ 300 mm
▪ r	≥ 600 mm	≥ 250 mm

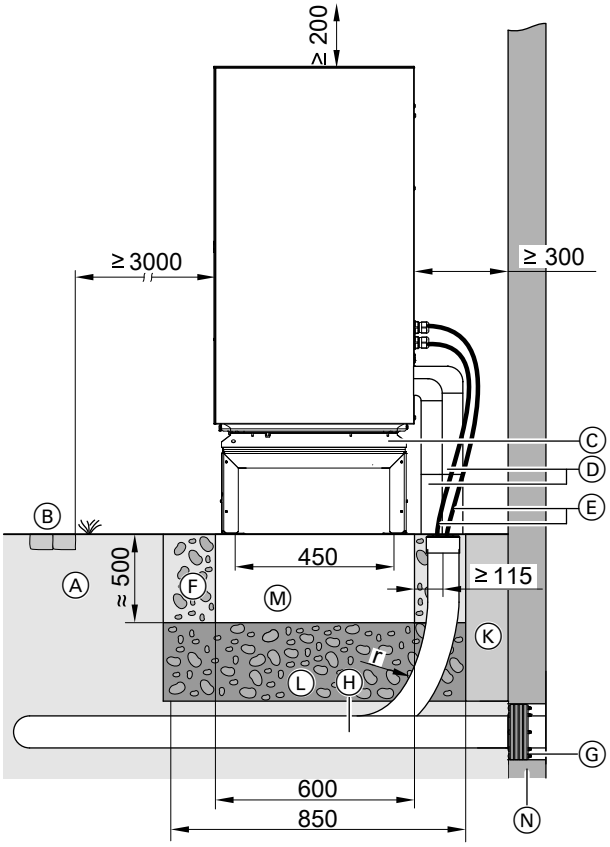

Fig. 30

Ⓐ Ground
Ⓑ Pathway, patio
Ⓒ Floor mounting bracket (accessories)
Ⓓ Connection set, floorstanding installation (accessories)
Ⓔ Indoor/outdoor unit CAN bus communication cable and outdoor unit power cable:
Route the cables free of strain.
Ⓕ For free drainage of condensate: Gravel bed as soakaway
Ⓖ Ring seal (accessories)
Ⓗ Quattro connection line laid underground (accessories)
Ⓚ Flexible separating layer between the foundations and the wall
Ⓛ Frost protection for foundations (compacted crushed stone, e.g. 0 to 32/56 mm); thickness of layer subject to local requirements and building regulations
Ⓜ Foundation strips
Ⓝ Wall
r Bending radius

Further installation instructions for the Quattro connection line
Separate installation instructions

Note
- *Provide sufficiently thick thermal insulation for pipework that is exposed to the outdoor air: See table on page 21.*
- *Protect the pipework against damage. Avoid trip hazards.*

Line entry above ground level

Note
The following information applies to installation with a bracket and with an anti-vibration base. Installation with a bracket is shown as an example.

Line entry above ground level (cont.)

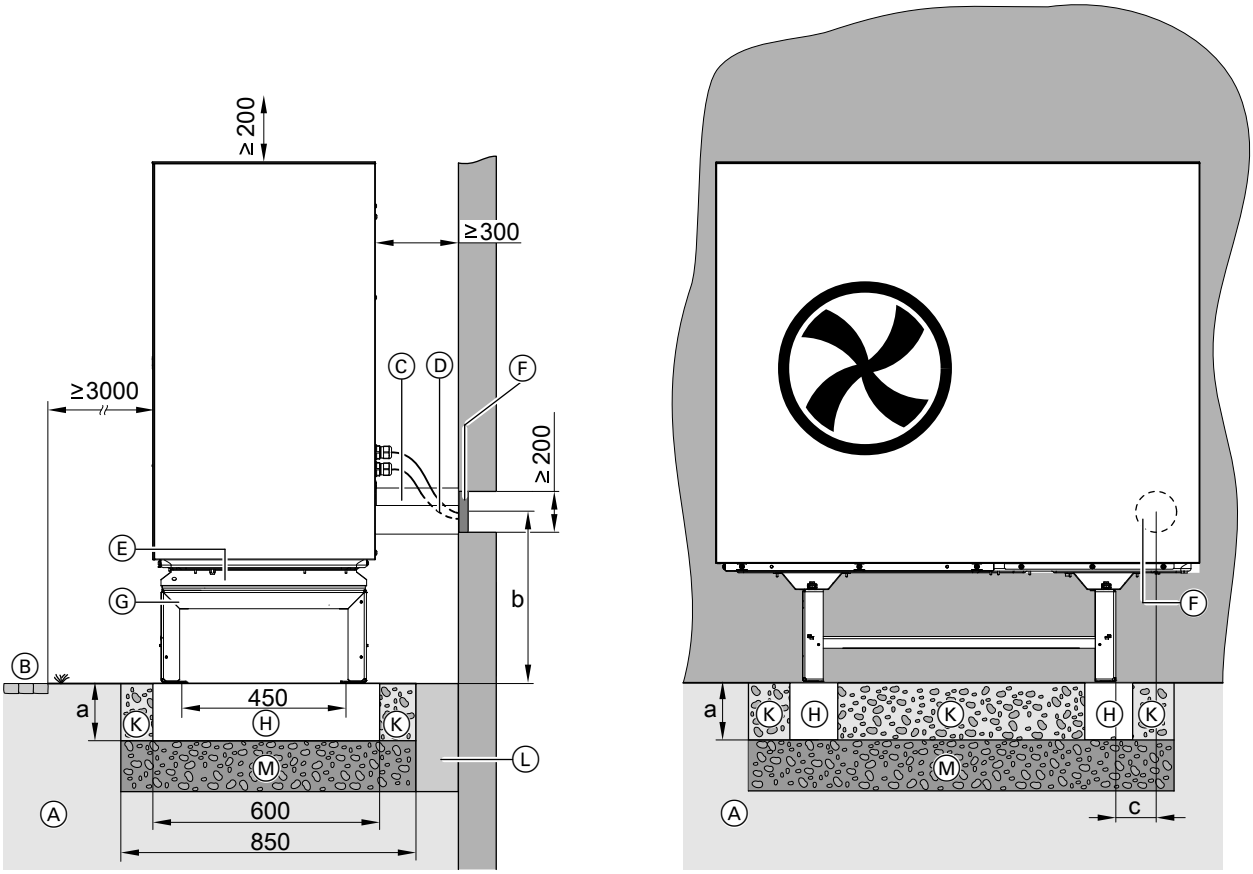

Fig. 31 Max. wall clearance with design casing (accessories): 300 mm

Ⓐ Ground
Ⓑ Pathway, patio
Ⓒ Hydraulic connection lines, indoor/outdoor unit
Ⓓ Indoor/outdoor unit CAN bus communication cable and outdoor unit power cable:
Route the cables free of strain.
Ⓔ Condensate drain in the base plate:
Do not connect anything if the condensate is to drain freely.
Ⓕ Wall outlet (accessories) for electrical cables and hydraulic lines
Ⓖ Floor mounting bracket (accessories), illustration without design casing (accessories)
Ⓗ Foundation strips
Ⓚ For free drainage of condensate: Gravel bed as soakaway
Ⓛ Flexible separating layer between the foundations and the building
Ⓜ Frost protection for foundations (compacted crushed stone, e.g. 0 to 32/56 mm); thickness of layer subject to local requirements and building regulations

Dimensions	Prefabricated foundation (accessories)	Concrete foundation on site
▪ a	585 mm	500 mm
▪ b	≥ 425 mm	≥ 425 mm
▪ c	≥ 69,5 mm	≥ 69,5 mm

Note

- *Provide sufficiently thick thermal insulation for pipework that is exposed to the outdoor air: See table on page 21.*
- *Protect the pipework against damage. Avoid trip hazards.*

Wall mounting with bracket set

Installation should **only** be performed with the bracket set for wall mounting (accessories).

Separate installation instructions for mounting bracket set for wall-mounting

Danger
Incorrect installation can lead to equipment damage and personal injury, e.g. if the outdoor unit falls down or falls over.
Only install the outdoor unit in accordance with the specifications in these instructions.

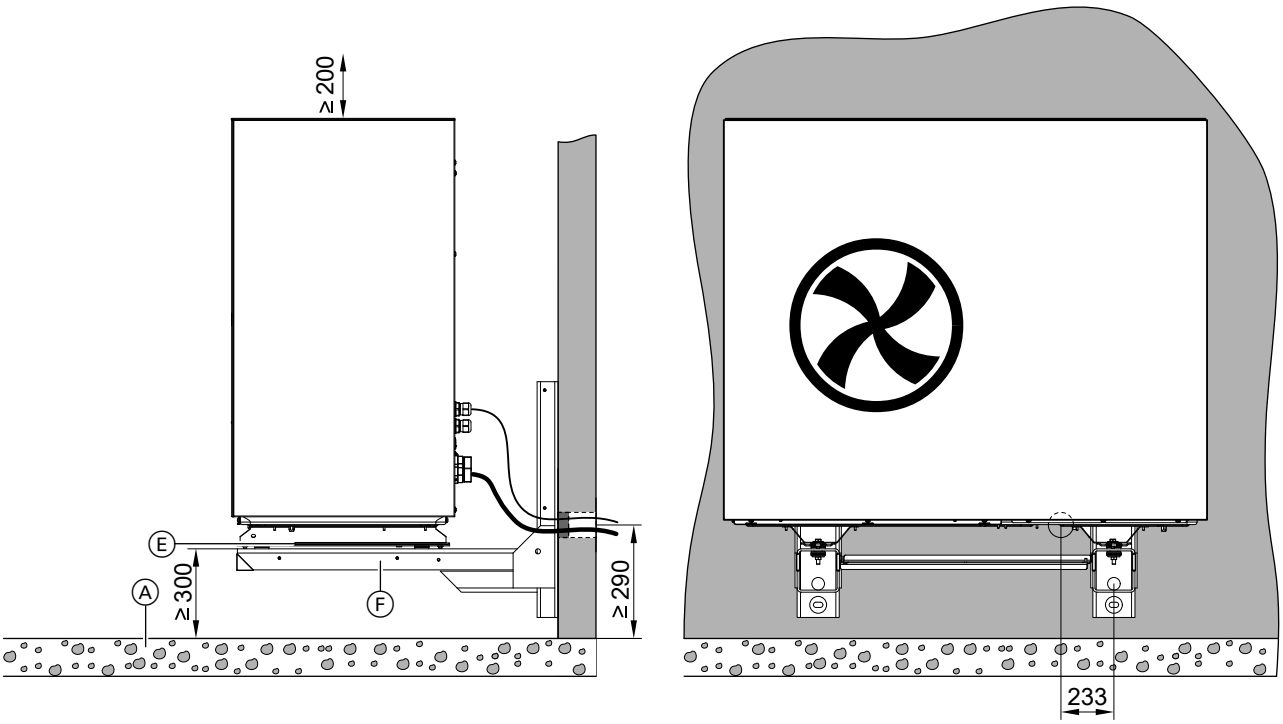

Fig. 32

Ⓐ Gravel bed as condensate soakaway
Ⓑ Connection set for wall mounting bracket (accessories)
Ⓒ Indoor/outdoor unit CAN bus communication cable and outdoor unit power cable:
Route the cables free of strain.
Ⓓ Wall outlet (accessories) for electrical cables and hydraulic lines
Ⓔ Condensate drain in the base plate:
Do not seal the opening.
Ⓕ Bracket for wall mounting (accessories), shown without design casing (accessories)

Note
- *For precise marking of the drill holes for the wall mounting bracket and wall opening: Use the drilling template supplied with the wall mounting bracket.*
- *Provide sufficiently thick thermal insulation for pipework that is exposed to the outdoor air: See table on page 21.*

Opening the outdoor unit

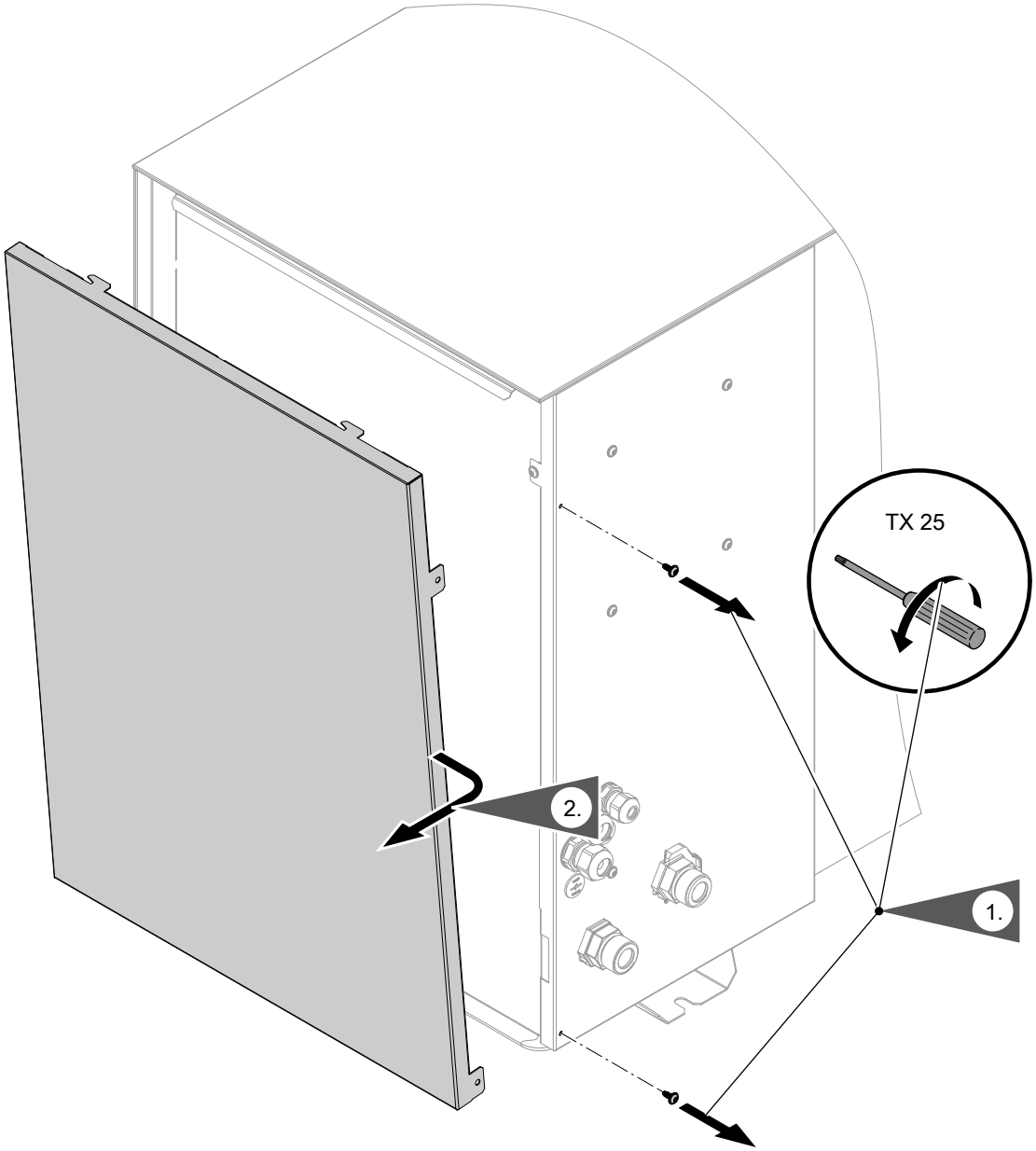

Fig. 33

3. Check visible components of the outdoor unit for transport and storage damage.

Connection of hydraulic connection lines to the secondary circuit

Connections to the outdoor unit

- Connect the connection lines of the hydraulic connection set (accessories) to the outdoor unit using either copper pipe or corrugated stainless steel pipe, depending on the connection set.
- Requirements to be met by on-site lines, e.g. regarding cross-section, system pressure: See technical guides.
- A heating filter is required in the return to the outdoor unit.
  - New build requirement:
    Ball valve filter with magnet (accessories)
  - Modernisation requirement:
    Ball valve filter with magnet (accessories) and an additional on-site dirt separator
    Or
    Dirtstop XL heating filter (accessories)

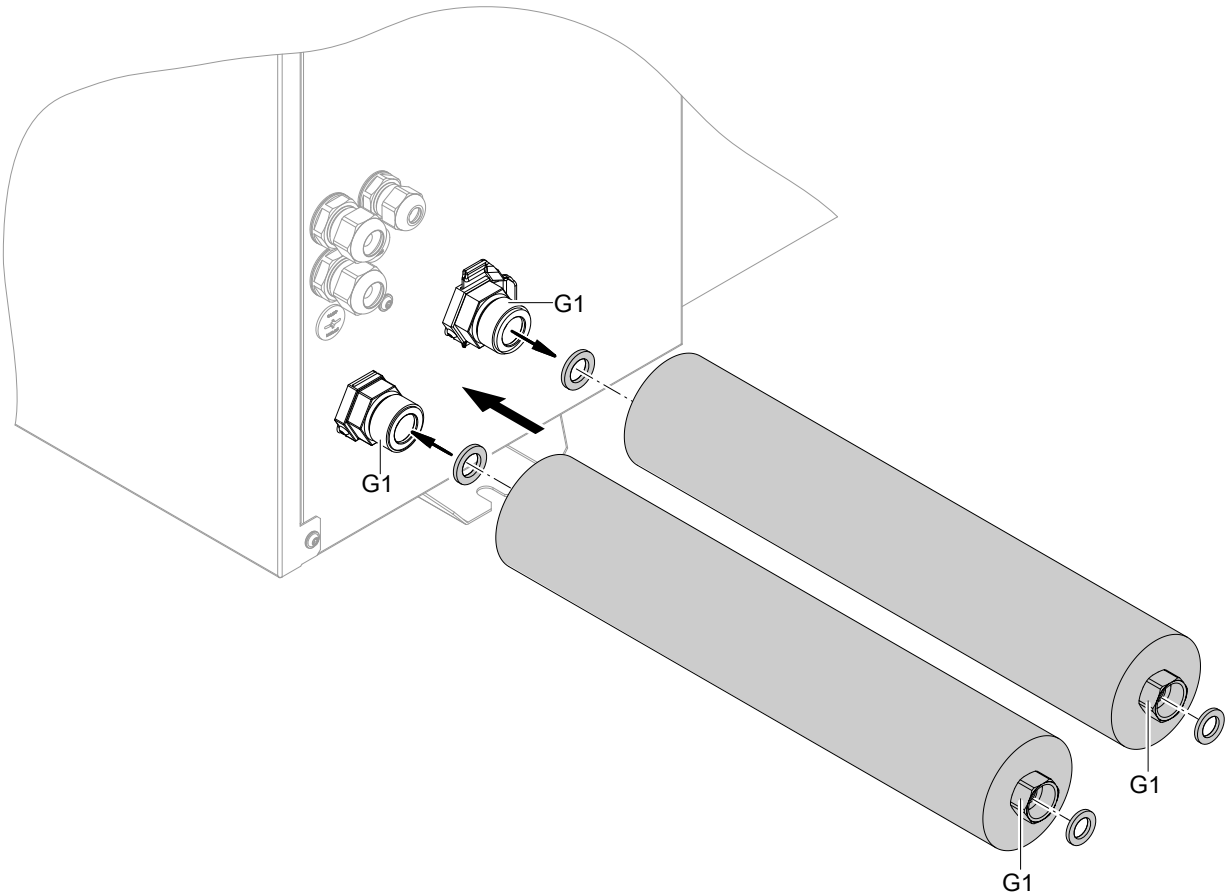

Fig. 34

Adaptor for connecting the Quattro connection line (accessories) to the outdoor unit

Quattro connection line	Adaptor
Made from PE (accessories available in lengths 10/15/20 m)	G 1¼ (female thread) to G 1 (male thread)
Made from corrugated stainless steel pipe (accessories available in lengths 5 m)	DN 32 x 1 (female thread) to G 1 (male thread)

6260605

Connection of hydraulic connection lines to the… (cont.)

Components required for flushing the outdoor unit connection lines — secondary circuit

Recommendation for protecting the outdoor unit if the pipework became contaminated (swarf, dirt) during installation: First flush the connection lines between the indoor and outdoor units while they are de-energised, and then fill them according to one of the following two methods.

Version with additional 3/2-way ball valves

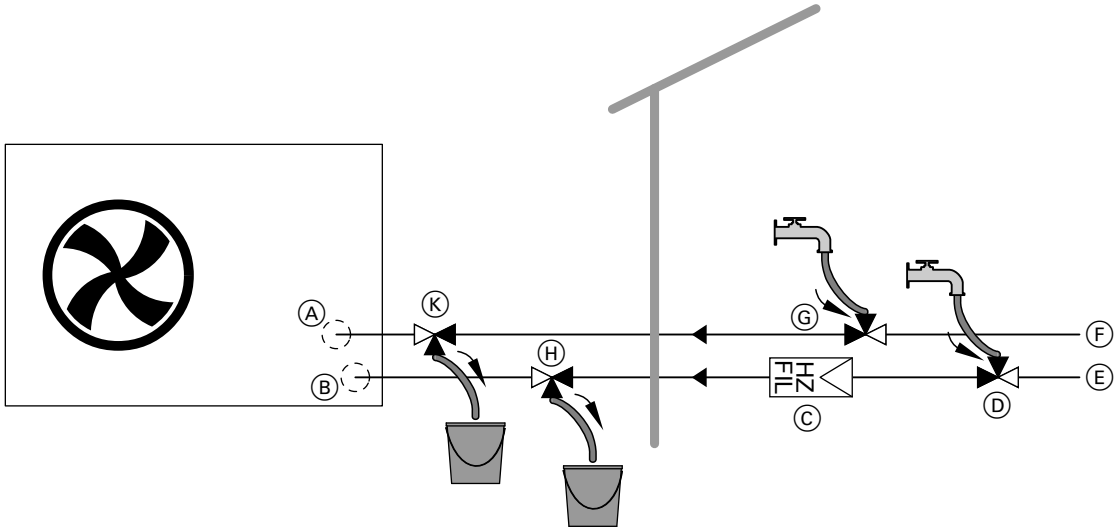

Fig. 35

Ⓐ Heating water flow from the outdoor unit
Ⓑ Heating water return to the outdoor unit
Ⓒ Heating filter in the heating water return to the outdoor unit (on site or part of standard delivery for outdoor unit)
Ⓓ 3/2-way ball valve (on site or part of standard delivery for indoor unit):
Open in the direction of the outdoor unit
Ⓔ From the secondary circuit
Ⓕ To the secondary circuit
Ⓖ 3/2-way ball valve (on site or part of standard delivery for indoor unit):
Open in the direction of the outdoor unit
Ⓗ Additional 3/2-way ball valve in the return of the outdoor unit (on site)
Open in the direction of the secondary circuit
Ⓚ Additional 3/2-way ball valve in the flow of the outdoor unit (on site)
Open in the direction of the secondary circuit

Connection of hydraulic connection lines to the… (cont.)

Version with an additional heating filter

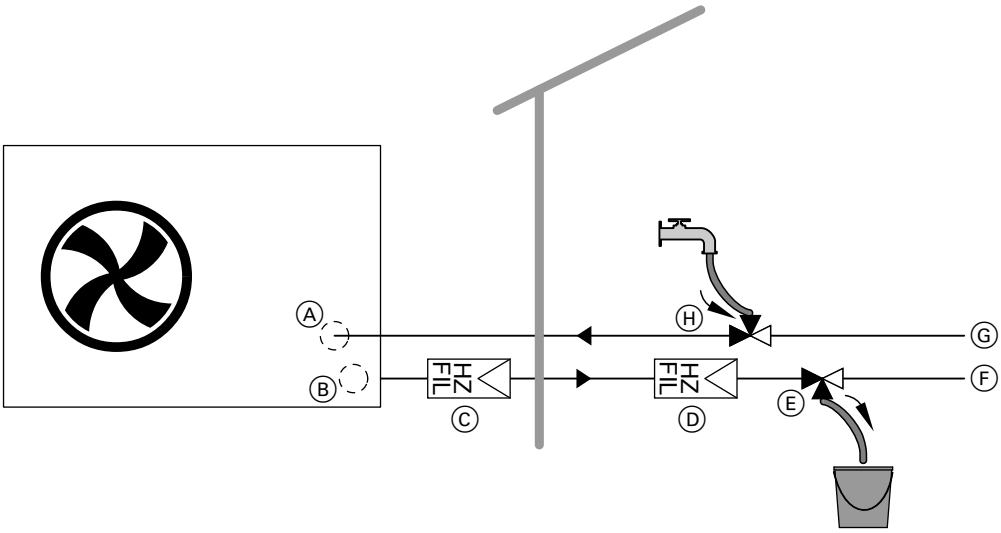

Fig. 36

Ⓐ Heating water flow from the outdoor unit
Ⓑ Heating water return to the outdoor unit
Ⓒ Additional heating filter in the outdoor unit's heating water return (on site or accessories)
Ⓓ Heating filter in the heating water return of the outdoor unit (on site or part of standard delivery for outdoor unit)
Ⓔ 3/2-way ball valve (on site or part of standard delivery for indoor unit):
Open in the direction of the outdoor unit
Ⓕ From the secondary circuit
Ⓖ To the secondary circuit
Ⓗ 3/2-way ball valve (on site or part of standard delivery for indoor unit):
Open in the direction of the outdoor unit

Note
Once all dirt/contamination has been removed, the additional heating filter in the heating water return of the outdoor unit Ⓒ in Fig. 36 can be removed.

Preparing the electrical connections

Cables

- For cable lengths and cable cross-sections: See the following tables.
- For accessories:
  Cables with the required number of cores for external connections.
  Prepare an on-site distribution box.

Recommended power cables and fuse protection

Recommended power cable	Sizes 06 to 08	Sizes 10 to 12
Cable cross-section	3 x 2.5 mm^2 **Or** 3 x 4.0 mm^2	3 x 2.5 mm^2 **Or** 3 x 4.0 mm^2
Max. cable length		
▪ For 3 x 2.5 mm^2	20 m	20 m
▪ For 3 x 4.0 mm^2	32 m	32 m
Max. fuse rating	16 A	20 A

Cable routing to the terminal area

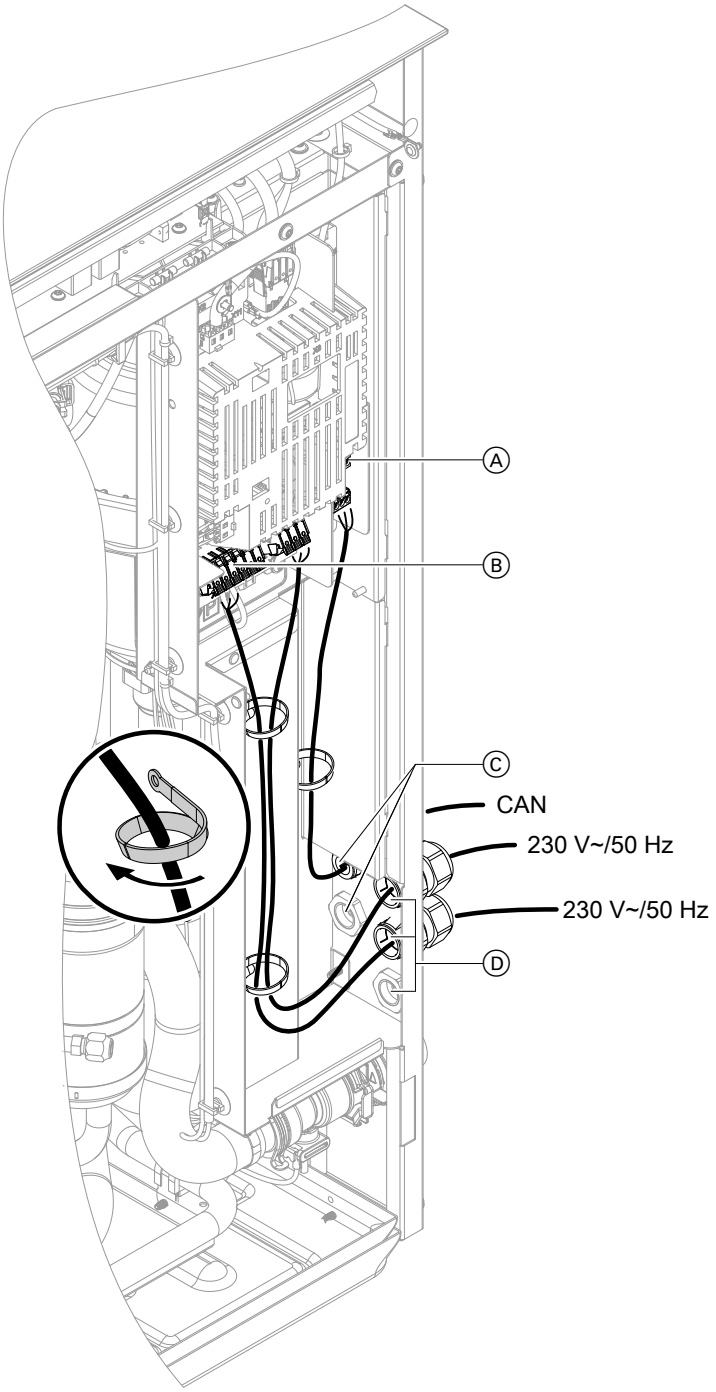

Fig. 37

Ⓐ CAN bus terminals
Ⓑ Mains terminals
Ⓒ Cable entries for CAN bus cables
Ⓓ Cable entries for power cables

Lengths of cable in appliance:
- Power cables: 1600 mm
- CAN bus cables: 1700 mm

! **Please note**
If apertures are not securely sealed this can lead to damage from condensation, vibrations and excessive noise.
Seal any unused cable entries with caps (standard delivery) to make them soundproof and impermeable.

6260605

Layout of the electrical connections

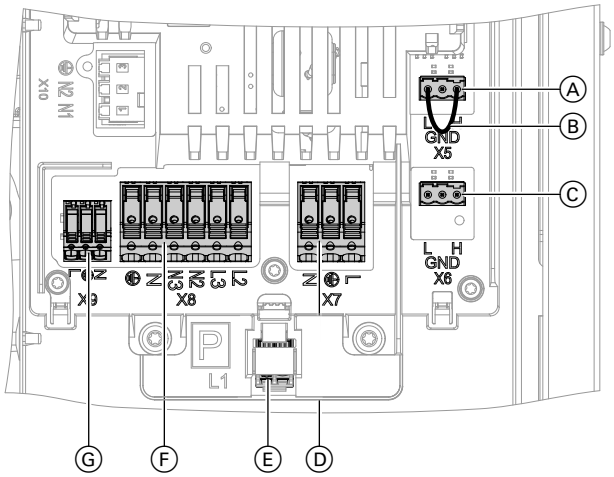

Fig. 38

Ⓐ CAN bus terminal for connecting an additional outdoor unit in a heat pump cascade
Ⓑ Terminator
Ⓒ CAN bus terminal for the connecting cable to the heat pump control unit
Ⓓ Mains terminals for the outdoor unit's power supply
Ⓔ Terminals for connecting the remaining wires of a 5 or 7-wire power cable
Ⓕ Only types ...-V005:
Mains terminals for the integral instantaneous heating water heater
Ⓖ Mains terminals for the condensate pan with integral electric ribbon heater (accessories)

Establishing a CAN bus connection

- The heat pump control unit and outdoor unit are integrated into the **internal** CAN bus system via the CAN bus connection.
- For a heat pump cascade, multiple outdoor units are also integrated into the **internal** CAN bus system via the CAN bus connection.
- The CAN bus of the appliances is designed for "line" bus topology with a terminator at both ends: See chapter "Terminator for CAN bus system".
- With CAN bus, the transmission quality and the cable lengths depend on the electrical properties of the cable.
  Only use **one** cable type within a CAN bus system.

Recommended cable:
- **Bus communication cable** (accessories), length 5, 15 or 30 m
- Cable length:
  - Min. 3 m
  - Max. 30 m

Terminator for CAN bus system

When integrating into a CAN bus system, a distinction is made as to whether a CAN bus subscriber is the first, last or an intermediate subscriber.
In order to avoid communication faults, only 1 terminator with 120 Ω may be present at the first and last subscriber for termination of the CAN bus system.
The two terminators required are connected at the factory.
If a CAN bus subscriber is an intermediate subscriber, the factory-fitted terminator must be removed: See the following chapter.
If CAN bus subscribers are subsequently added or removed, the terminators are removed from all intermediate subscribers. The removed terminators are connected to the new first and new last CAN bus subscribers.

To check this, the resistance at one of the CAN bus connections between CAN L and CAN H can be measured after all CAN bus connections have been completed. For correct measurement of the resistance, the power supply to all appliances in the CAN bus system must be interrupted.

Measured resistance:
- Set value:
  60 Ω ±10 %.
- Measured value < 60 Ω:
  More than 2 terminators installed
- Measured value > 60 Ω:
  Only 1 terminator installed
  or
  Terminator not equal to 120 Ω

Establishing a CAN bus connection (cont.)

CAN bus connection via an on-site cable

- Only use the cable types listed in the table.
- Only use cables with shielding.
- Also connect shielding to the "GND" terminal in each case.
- If necessary, remove the terminator.

CAN bus system	Recommended cable type (on site)	Alternative cable type (on site)
CAN bus cable	In line with ISO 11898-2, twisted pair cable, shielded	2-core, CAT7, shielded Or 2-core, CAT5, shielded
▪ **Cable cross-section**	0.34 to 0.6 mm^2	0.34 to 0.6 mm^2
▪ **Characteristic impedance**	95 to 140 Ω	95 to 140 Ω
▪ **Max. length** (entire CAN bus system)	120 m	120 m

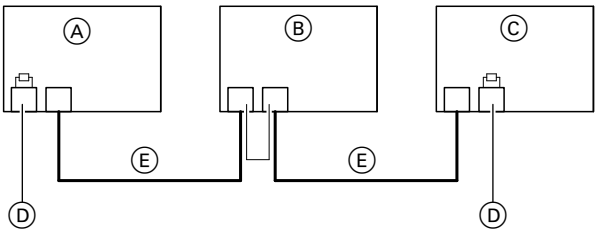

Fig. 39

Ⓐ **System/heat pump control unit** is connected as the first or last CAN bus subscriber.
Do **not** remove the terminator from terminal 72 for an internal CAN bus.

Ⓑ The outdoor unit is connected as a central CAN bus subscriber.
Remove the terminator from the upper terminal.

Ⓒ **Outdoor unit** connected as first or last CAN bus subscriber.
Do **not** remove the terminator from the upper terminal.

Ⓓ Terminal with terminator

Ⓔ Bus communication cable (accessories), length 5, 15 or 30 m

Routing the CAN bus cable

! **Please note**
Incorrectly executed electrical installations can cause appliance damage.
- Protect the CAN bus cable from damage.
- Do not crush or cut the wires when securing the cable.

! **Please note**
A bending radius that is too small can cause damage to the CAN bus cable and impair data transmission.
- Do not kink the CAN bus cable.
- Do not twist the CAN bus cable.
- Observe and adhere to the required bending radius:
  - Fixed installation
    Bending radius ≥ 10 times the cable cross-section
  - Movable installation
    Bending radius ≥ 15 times the cable cross-section

! **Please note**
Voltages ≥ 230 V~ in the direct vicinity of the CAN bus cable can interfere with data transmission.
- Do not route the CAN bus cable alongside 230 V~/400 V~ power cables.
- Do not route the CAN bus cable in the vicinity of motors or motor drives.
- Strip as little of the insulation as possible, directly before the terminals.

Establishing a CAN bus connection (cont.)

Connecting the CAN bus communication cable between heat pump control unit — outdoor unit (accessories)

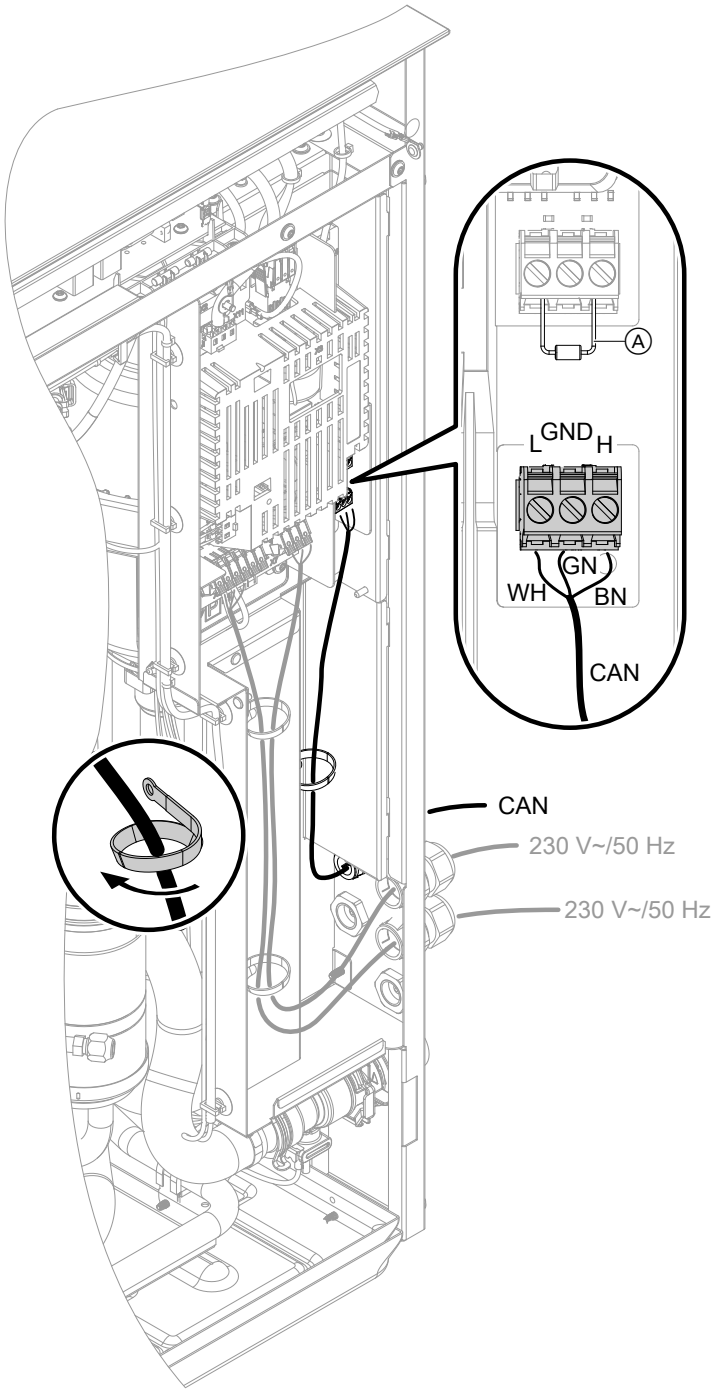

Fig. 40

Ⓐ Terminator at upper terminal

Colour coding to IEC 60757:
BN Brown
GN Green
WH White

Mains connection

Isolators for non-earthed conductors

- Install an isolator in the power cable to provide omnipolar separation from the mains for all active conductors, corresponding to overvoltage category III (3 mm) for full isolation. This isolator must be fitted in the permanent electrical installation in line with installation requirements, e.g. main switch or upstream circuit breaker.
- Additionally install an AC/DC-sensitive RCD with a nominal fault current of maximum 30 mA (RCD type B) for current that can occur with energy efficient equipment.
- Select and size RCDs to DIN VDE 0100-530.

Danger
Incorrect electrical installations can lead to serious injury from electric shock and result in appliance damage.

Implement the mains connection and all safety measures (e.g. RCD circuit) in accordance with the following regulations:
- IEC 60364-4-41
- VDE regulations
- TAR low voltage VDE-AR-N-4100

Danger
Incorrect electrical installations can lead to serious injury from electric shock and result in appliance damage.
- Protect the power cable against damage.
- Where it runs outdoors, the power cable must be no lighter than rubber sheathed cables with a polychloroprene covering. Only use cables with the designation 60245 IEC 57.

Danger
The absence of system component earthing can lead to serious injury from electrical current and component damage in the event of an electrical fault.
The appliance and pipework must be connected to the equipotential bonding of the building.

Danger
Incorrect core assignment can lead to serious injury from electric shock and result in appliance damage.
Do not interchange wires "L" and "N".

Note
Incorrectly executed electrical installations may cause undesirable electromagnetic interaction with other electronic devices.

- Consult your power supply utility, which may offer different supply tariffs for the power circuits. Observe the technical connection conditions of the power supply utility.
- If the compressor and/or instantaneous heating water heater are operated at an economy tariff (power-OFF), either provide an additional cable (e.g. 3 x 1.5 mm^2) for the power-OFF signal from the distribution board (meter box) to the heat pump control unit.
- The assignment of the power-OFF (for compressor and/or instantaneous heating water heater) is made via the type of connection and by setting parameters in the heat pump control unit.
  In Germany, the power supply can be switched off for a maximum of 3 x 2 hours per day (24 h).
  Output restriction
  Instead of being switched off completely (power-OFF), the heat pump output is restricted to a maximum of 4.2 kW. The calculated or specified output restriction for the system is set during commissioning.
- The feed to the **heat pump control unit/PCB** must be **without** power-OFF. Tariffs subject to possible shutdown must not be used here.
- In conjunction with self-consumption (use of power generated by the photovoltaic system for own use): During the power-OFF period, it is **not** possible to operate the compressor with self-generated power.
- If the power supply to the appliance is connected with a flexible power cable, ensure that the live conductors are pulled taut before the earth conductor in the event of strain relief failure. The length of the earth conductor wire will depend on the design.

Mains connection (cont.)

Outdoor unit mains connection

Danger
Risk of explosion: Electrical components can cause sparks which may be ignited by escaping refrigerant.
Before inserting or removing the power supply plug, isolate the system from the power supply, e.g. at the separate fuse or main switch. Check that the system is no longer live.

Please note
Incorrect phase sequence can cause damage to the appliance.
Implement the 400 V~ compressor mains connection **only** in the phase sequence specified (see terminals) with a **clockwise** rotating field.

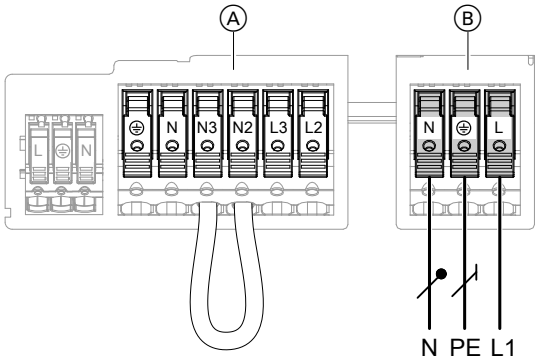

Fig. 41 1/N/PE 230 V~/50 Hz

Ⓐ Only for types ...-V005:
Mains terminals for instantaneous heating water heaters (comfort function)

Ⓑ Mains terminals for an outdoor unit (refrigerant circuit controller, compressor, etc.)
Only for types ...-V004:
Includes power supply for the instantaneous heating water heater (protective function)

- Outdoor unit terminal area: See chapter "Cable routing to the terminal area".
- Shield the power cable from direct sunlight.

Recommended power cable	Sizes 06 to 08	Sizes 10 to 12
Cable cross-section	3 x 2.5 mm^2 **Or** 3 x 4.0 mm^2	3 x 2.5 mm^2 **Or** 3 x 4.0 mm^2
Max. cable length		
▪ For 3 x 2.5 mm^2	20 m	20 m
▪ For 3 x 4.0 mm^2	32 m	32 m
Max. fuse rating	16 A	20 A

Mains connection (cont.)

230 V~/400 V~ mains connection for the instantaneous heating water heater

The mains connection for the instantaneous heating water heater depends on the type of outdoor unit:

- Outdoor unit types ...-V004:
  Power is supplied via the outdoor unit's mains connection.
  Note
  The instantaneous heating water heater can only be in operation if the compressor is not running, e.g. at outside temperatures < –20 °C (protective function).
- Outdoor unit types ...-V005:
  Power is supplied via a separate mains connection: See the following tables.
  Note
  The instantaneous heating water heater can be switched on in addition to the compressor, e.g. for convenient DHW heating (comfort function).
- The 230 V~ mains connection is 1-phase and can be designed as 1-stage or 2-stage.
- The 400 V~ mains connection is 2-phase and can be designed as 1-stage or 2-stage.

Depending on the version, the output restriction for the instantaneous heating water heater must be set during commissioning: See the following tables.

Types ...-V005: 230 V~ mains connection for instantaneous heating water heater

1-phase mains connection

	1-stage 1x 1/N/PE 230 V~/50 Hz	2-stage 2x 1/N/PE 230 V~/50 Hz
	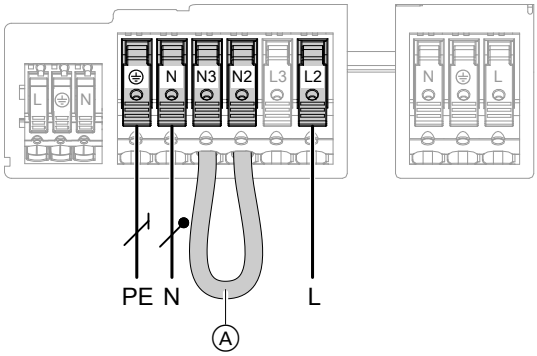	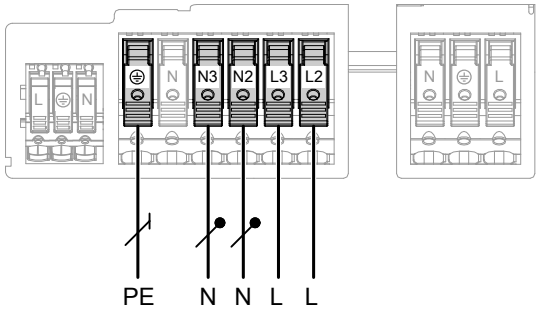
Jumpers Ⓐ at terminals N1 to N2		
	Do not remove!	Remove jumper!
Recommended power cable		
	3 x 2.5 mm²	7 x 2.5 mm²
Max. cable length		
	25 m	25 m
Max. fuse rating		
	16 A	16 A
Tariff		
	Economy tariff and power-OFF can be applied	Economy tariff and power-OFF can be applied
Output restriction during commissioning		
	3.2 kW	6.4 kW

Mains connection (cont.)

Types ...-V005: 400 V~ mains connection for instantaneous heating water heater

2-phase mains connection

	1-stage 1/N/PE 230 V~/50 Hz	2-stage 2/N/PE 400 V~/50 Hz
	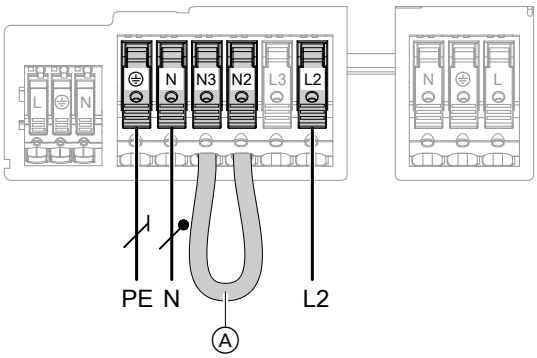	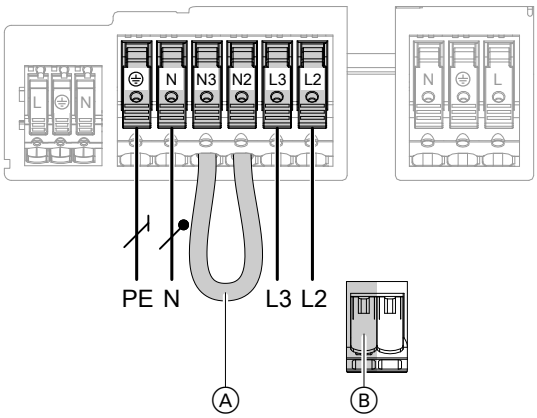
Jumpers Ⓐ at terminals N1 to N2		
	Do not remove!	Do not remove!
Recommended power cable		
	3 x 2.5 mm²	5 x 2.5 mm² Connect the remaining wires to terminal Ⓑ.
Max. cable length		
	25 m	25 m
Max. fuse rating		
	16 A	16 A
Tariff		
	Economy tariff and power-OFF can be applied	Economy tariff and power-OFF can be applied
Output restriction during commissioning		
	3.2 kW	6.4 kW

Mains connection for instantaneous heating water heaters in heat pump cascades

In the case of heat pump cascades, observe the max. permissible power output. If necessary, restrict the output of the instantaneous heating water heater during commissioning, e.g. to 3.2 kW for all outdoor units. Despite these output restrictions, the required heating output according to the design of the system must be available.

Power supply with power-OFF: Without on-site load disconnect

The power-OFF signal is connected to the heat pump control unit at terminal 143, even in heat pump cascades.

Electrical connections of the power supply:

- Heat pump control unit
  Separate installation and service instructions
- Outdoor unit:
  See chapter "Compressor mains connection".
- Heat pump cascade:
  The electrical power supply is connected in the same way for each outdoor unit. This gives Energy Management (EMS) optimum control over demand.

Power supply with power-OFF: Without on-site… (cont.)

Note
Observe the technical connection requirements of the relevant power supply utility.

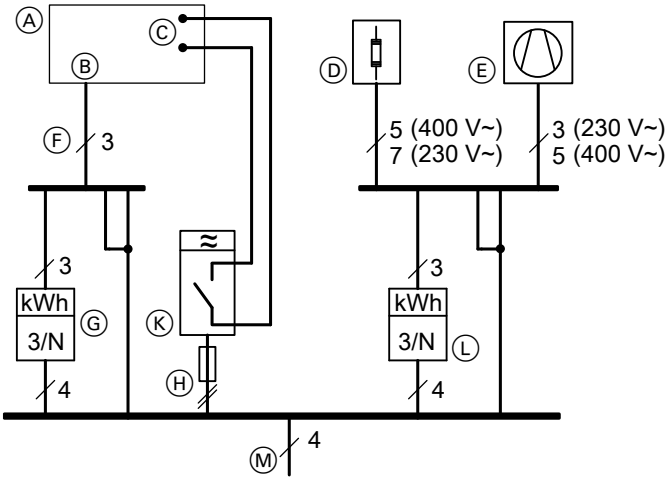

Fig. 42 Diagram excluding fuses and RCD

- Ⓐ Heat pump control unit/system control unit
- Ⓑ Terminals for power supply to heat pump control unit/system control unit
- Ⓒ Connection for power supply utility switching signal
- Ⓓ Instantaneous heating water heater
- Ⓔ Compressor
- Ⓕ Mains connection for heat pump control unit/system control unit
- Ⓖ Premium tariff meter
- Ⓗ Ripple control receiver backup fuse
- Ⓚ Ripple control receiver (contact open: Power-OFF active); feed: TNC system
- Ⓛ Economy tariff meter
- Ⓜ Feed: TNC system

Releasing the transport bracket

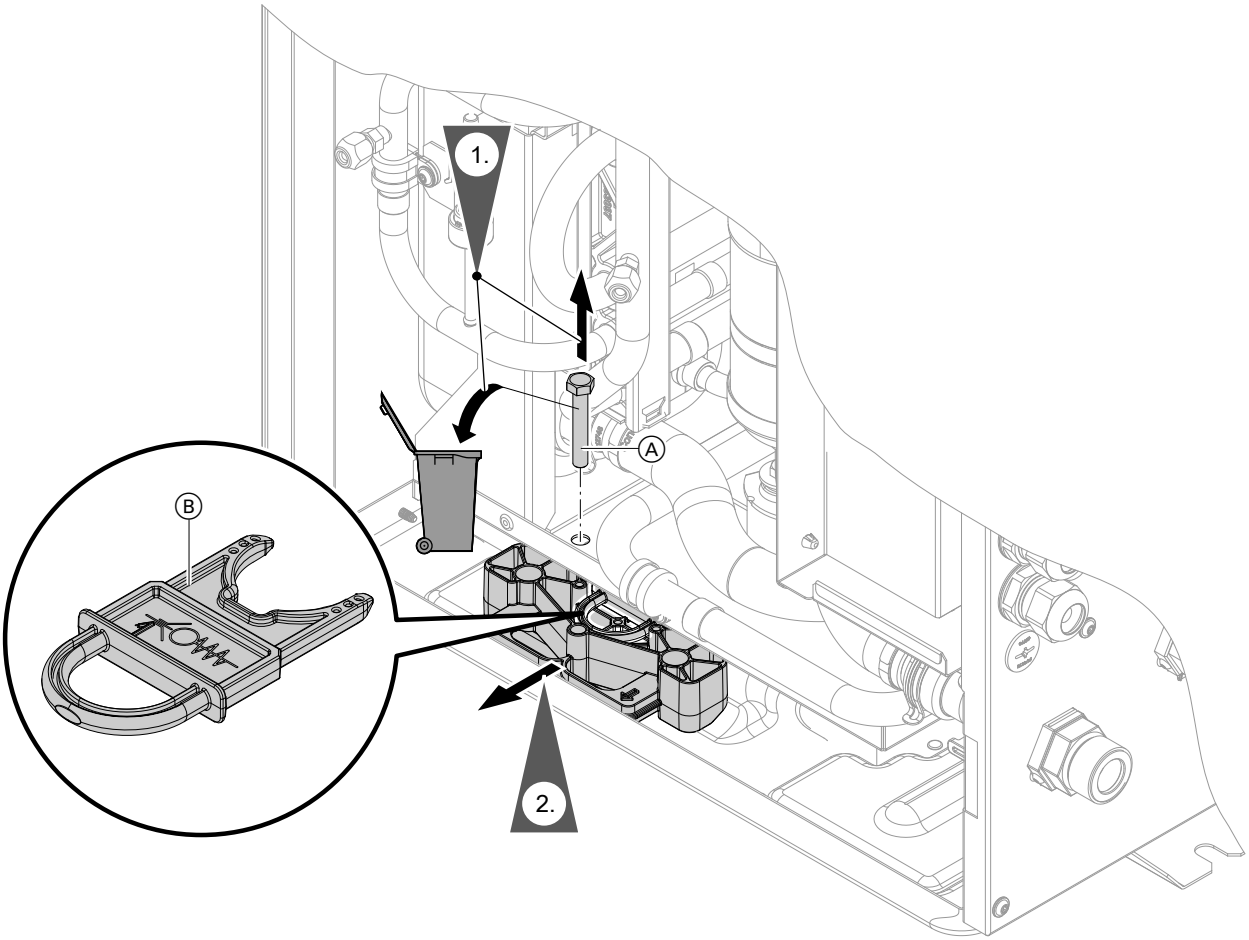

Fig. 43

Ⓐ Locking screw
Ⓑ Key for opening the non-return valve for filling or draining

Note
The transport bracket remains in the appliance after it is released.

Closing the outdoor unit

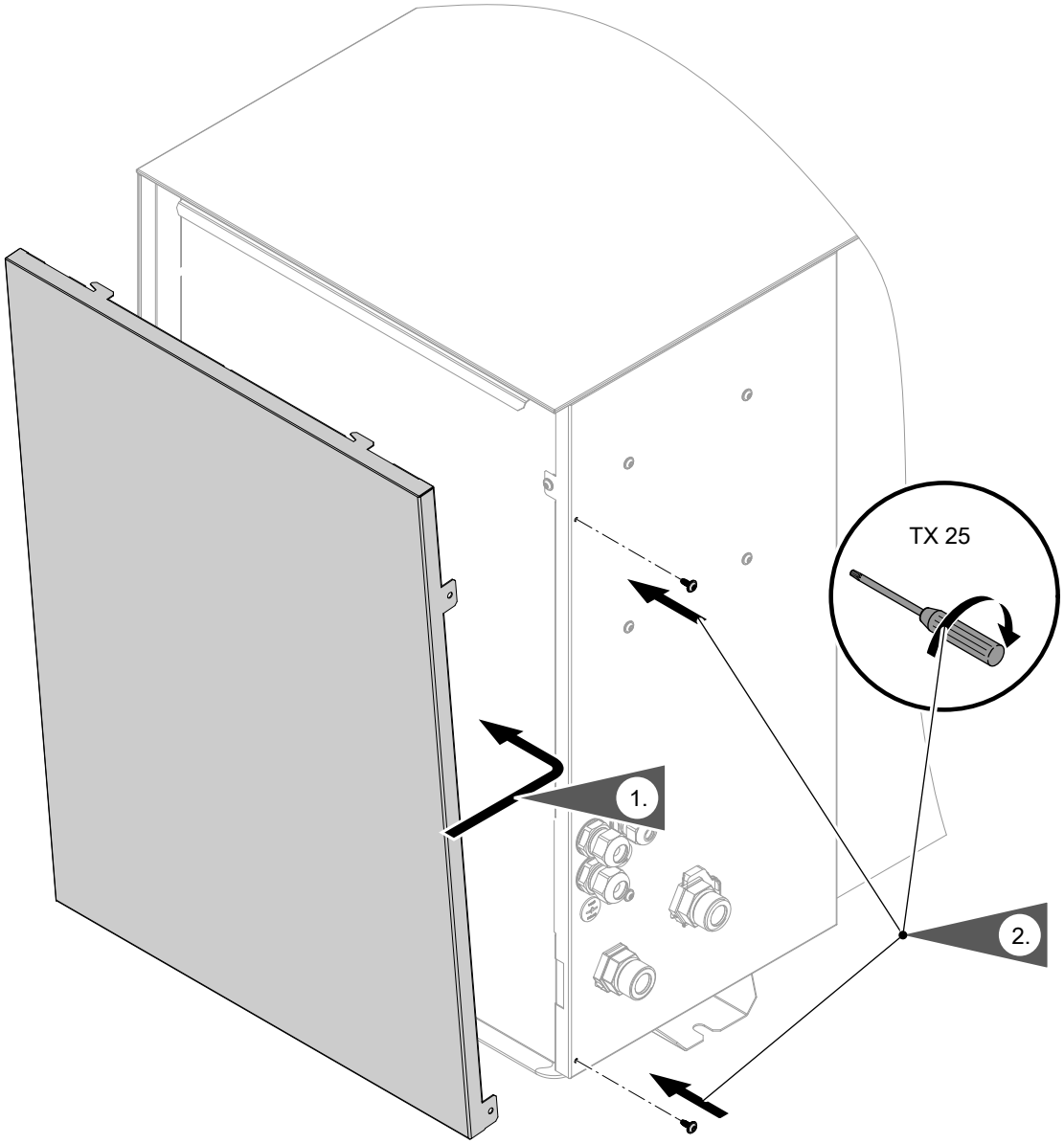

Fig. 44

3. Torque 1.5 +1.0 Nm

Steps - commissioning, inspection and maintenance

Commissioning steps
Inspection steps
Maintenance steps

				Page
•	•	•	**1. Opening the outdoor unit**	62
•	•	•	**2. Checking the electrical connections for firm seating**	62
•			**3. Commissioning the outdoor unit**	62
•	•	•	**4. Checking that the fan can run freely**	63
•	•	•	**5. Cleaning the heating filter (accessories or on site)**	63
•	•	•	**6. Checking all connections on the heating water side for leaks**	64
	•	•	**7. Testing the refrigerant circuit**	64
		•	**8. Cleaning the heat exchanger (evaporator)**	66
	•	•	**9. Cleaning the condensate pan and condensate drain (accessories)**	66
•	•	•	**10. Closing the outdoor unit**	67
•	•	•	**11. Checking the outdoor unit for noise**	69

6260605

Opening the outdoor unit

Danger
Contact with live components can lead to serious injury from electric current. Some components on PCBs remain live even after the power supply has been switched off.
- **Do not touch** electrical terminal areas.
- When working on the outdoor unit, isolate the system from the power supply, e.g. at a separate fuse or at a main switch. Check that no installed power circuits of the outdoor unit are still live. Safeguard against unauthorised reconnection.
- Before working on the appliance, wait at least 4 min until the voltage has dropped out.

Danger
The absence of system component earthing can lead to serious injury from electrical current and component damage in the event of an electrical fault.
All earth conductor connections **must** be reconnected.
The appliance and pipework must be connected to the equipotential bonding of the building.

Please note
Refrigerant can escape when working on the refrigerant circuit.
- It is essential that regulations and guidelines on handling refrigerant are always observed and adhered to: See "Safety instructions".
- Work on the refrigerant circuit must **only** be carried out by a certified contractor (in accordance with Regulations (EU) 2024/573 and (EU) 2015/2067).

See page 45.

Checking the electrical connections for firm seating

Danger
Contact with live components can lead to serious injury from electric current. Some components on PCBs remain live even after the power supply has been switched off.
- When working on the outdoor unit, isolate the system from the power supply, e.g. at a separate MCB/fuse or a mains isolator. Check the system is no longer live and safeguard against reconnection.
- Prior to working on the appliance, wait at least 4 min until the voltage on the charged capacitors has completely dropped out.

Commissioning the outdoor unit

The outdoor unit can only be commissioned **together** with an indoor unit or a controller.

Please note
Commissioning immediately after siting the outdoor unit can lead to appliance damage.
Wait at least **30 min** between siting the outdoor unit and commissioning the heat pump.

System commissioning:
See installation and service instructions for the indoor unit

Compressor start-up in the outdoor unit when outside temperatures are below –10 °C
For technical reasons, compressor start-up is delayed by several minutes in the following cases:
- *When carrying out initial commissioning*
- *After long downtimes*

Carry out the following work only **after** the system has been commissioned.

6260605

Checking that the fan can run freely

Danger
Contact with the fans while they are operating can result in serious cutting injuries.
- Isolate the outdoor unit from the power supply. Safeguard against unauthorised reconnection.
- Do not open the appliance until the fan has come to a stop.

Danger
Operating the outdoor unit with an out-of-balance fan can cause severe vibrations and damage to the outdoor unit. This may result in life threatening injuries.
Do **not** modify, move or remove the balancing weights.

Danger
A blocked fan may break during operation. Flying fragments can cause life threatening injuries. Remove any blockages **before** commissioning.

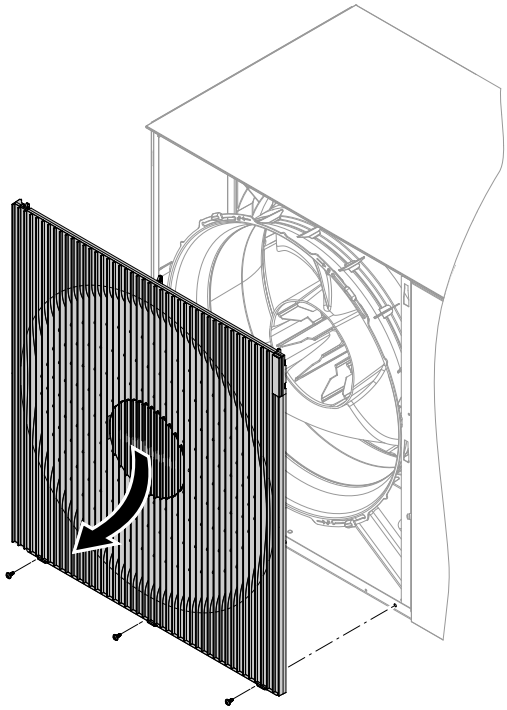

Fig. 45

1. Remove the fan grille.
2. Turn the fan by hand.

Torque for the screws:
1.8 ±0.25 Nm

Cleaning the heating filter (accessories or on site)

- Filter in the ball valve:
  Remove filter from ball valve. Rinse under running water.
- Dirtstop XL:
  Separate instructions

Checking all connections on the heating water side for leaks

Danger
There is a risk of electric shock from escaping heating water.
When commissioning and after carrying out maintenance work, check all water side connections for leaks.

Please note
Leaking hydraulic connections lead to appliance damage.
- Check the internal and on-site hydraulic connections for leaks.
- In the event of leaks, switch off the appliance immediately. Drain the heating water. Check the seal rings for correct fit. **Always** replace displaced seal rings.

Testing the refrigerant circuit

Pressure equipment in the refrigerant circuit according to Pressure Equipment Directive 2014/68/EU

Outdoor unit sizes 06 to 08

Pipework	$\varnothing_{max}$	PS x DN	Category
Pipework to Article 4, paragraph 3 And Evaporator pipework	< DN 25	< 546 bar mm	—

Vessel	V_{max}	PS x V_{max}	Category
Header	2.2 l	70.4 bar l	II
Compressor	1.06 l	33.92 bar l	I
Accumulator (compressor)	0.36 l	11.52 bar l	
Vessel to Article 4, paragraph 3	< 1 l	< 32 bar l	—

Safety components	Switching pressure	Category
High pressure switch PSH	31 ±1 bar (3.1 ±0.1 MPa)	IV

PS Permissible operating pressure: See "Specification".

Outdoor unit sizes 10 to 12

Pipework	$\varnothing_{max}$	PS x DN	Category
Pipework to Article 4, paragraph 3 And Evaporator pipework	< DN 25	< 546 bar mm	—

Vessel	V_{max}	PS x V_{max}	Category
Header	2.5 l	80 bar l	II
Compressor	1.5 l	48 bar l	I
Accumulator (compressor)	0.83 l	26.56 bar l	
Vessel to Article 4, paragraph 3	< 1 l	< 32 bar l	—

Safety components	Switching pressure	Category
High pressure switch PSH	31 ±1 bar (3.1 ±0.1 MPa)	IV

6260605

Testing the refrigerant circuit (cont.)

PS Permissible operating pressure: See "Specification".

Maintenance of pressure equipment and safety equipment

Maintain pressure equipment and safety equipment according to the local and national regulations and guidelines.

Recommended annual service

Visual check:
- Check all components for damage.
- Check all components and pipes for corrosion.
- Check insulation materials for damage and ageing.
- Check the outdoor unit interior for oil residue.
- Check all screw connections for firm seating.
- Check all components containing water for leaks.
- Check all electrical components and connections for damage, ageing and firm seating.
- Check all dampers and brackets.
- Check that the safety zone requirements are met.

Repairs:
- Rectify any defects found during the visual check. If necessary, replace components, gaskets and insulation.
- Observe regulations and specifications for working on the refrigerant circuit.
  See also chapter "Checklist for maintenance work".

Cleaning work:
- Clean the heating filter in the return of the outdoor unit (accessories or on site).
- Clean the cladding of the external panels and the interior of the outdoor unit.
- Clean the evaporator: See chapter "Cleaning the outdoor unit heat exchanger (evaporator)".
- Ensure the condensate can drain freely: See chapter "Cleaning the condensate pan and condensate drain".

Further tests:
- Leak test: See chapter "Checking the refrigerant circuit for leaks".
- Test the quality of the heating water: See chapter "Fill and top-up water".

Maintenance after max. 12 years for outdoor units with 1 and 2 fans

Due to the refrigerant R290, a special test and service of pressure equipment and safety equipment is required after 12 years. The test may require some components to be replaced.

Repair or dispose of the outdoor unit in the following cases:
- If it is suspected that the components are no longer suitable for safe operation.
- If the components do not pass the inspection.

When working on the refrigerant circuit: See chapter "Checklist for maintenance work".

Note
The specified maintenance work and the Pressure Equipment Directive must also be complied with for commercial use. Any additional regulations for commercial use must also be observed.

- Test the safety chain **annually**: Request information about the test procedure from the manufacturer's technical support.
- Replace the high pressure switch PSH at least **every 12 years**.
- Replace the high limit safety cut-out at least **every 12 years**.

Checking the refrigerant circuit for leaks

Check the connections for refrigerant leaks.

⚠ **Danger**
Direct contact with refrigerant can be harmful to the skin.
Wear safety goggles and protective gloves when working on the refrigerant circuit.

! **Please note**
Refrigerant can escape when working on the refrigerant circuit.
- Always observe regulations and guidelines on handling this type of refrigerant.
- Work on the refrigerant circuit must **only** be carried out by a certified contractor (in accordance with Regulations (EU) 2024/573 and (EU) 2015/2067).

Cleaning the heat exchanger (evaporator)

Danger
If you touch live components or they come into contact with water, this can result in serious injury due to electric shock.
- Isolate the outdoor unit from the power supply. Safeguard against unauthorised reconnection.
- Protect the outdoor unit against moisture.

Danger
Easily flammable liquids and materials, e.g. naphtha/petrol, solvents, cleaning agents, paints or paper, can cause deflagration and fires.
- Do **not** use substances containing acids or solvents, such as vinegar-based cleaners, cellulose or synthetic resin thinners, nail varnish remover, ethyl alcohol, sprays, etc.
- Do **not** use substances containing chloride or ammonia.

Danger
The sharp edges of the heat exchanger (evaporator) can cause injuries.
Avoid contact.

Please note
Commercially available domestic cleaning agents and special cleaning agents can damage the heat exchanger (evaporator).
- Clean the fins of the heat exchanger (evaporator) on the back of the outdoor unit with a long-haired hand brush, or for example with the finned brush from the "heat pump service set".
- Only use mild water-based domestic cleaning agents.
- Do **not** use substances that contain abrasive particles such as polishes, scouring agents, dirt erasers or scouring pads.

1. **Checking the evaporator**
   Check the heat exchanger (evaporator) regularly for dirt (visual inspection).

   Please note
   A dirty heat exchanger (evaporator) reduces the heating output and may cause the heat pump to shut down.
   Clean the evaporator if necessary.

2. **Cleaning the evaporator**
   Clean the evaporator with a long-haired hand brush or, if necessary, with compressed air.

   Please note
   Excessive air pressure from the front or sides can result in the deformation of the aluminium fins of the heat exchanger.
   Only point the compressed air gun at the heat exchanger from the front and from an adequate distance.

3. **Checking the aluminium fins**
   Check the aluminium fins of the heat exchanger for deformation and scratches. If necessary, repair with a suitable tool, e.g. with the flexible fin comb from the "heat pump service set".

Cleaning the condensate pan and condensate drain (accessories)

Danger
If you touch live components or they come into contact with water, this can result in serious injury due to electric shock.
- Isolate the outdoor unit from the power supply. Safeguard against unauthorised reconnection.
- Protect the outdoor unit against moisture.

Danger
Contact with the fans while they are operating can result in serious cutting injuries.
Isolate the outdoor unit from the power supply. Safeguard against unauthorised reconnection.

Danger
Easily flammable liquids and materials (e.g. naphtha/petrol, solvents, cleaning agents, paints or paper) can cause deflagration and fire.
- Do **not** use substances containing acids or solvents, such as vinegar-based cleaners, cellulose or synthetic resin thinners, nail varnish remover, ethyl alcohol, sprays, etc.
- Do **not** use substances containing chloride or ammonia.

Cleaning the condensate pan and condensate… (cont.)

Please note
Commercially available domestic cleaning agents and special cleaning agents can damage the condensate pan.
- Only clean with clear water. Do not use any cleaning agents.
- Do **not** use substances that contain abrasive particles such as polishes, scouring agents, dirt erasers or scouring pads.

Please note
Prevent damage due to condensate.
Cover electronic components with suitable watertight material.

Please note
Repeated mounting and dismounting of the fan causes the fixings to lose their holding force. The fan can no longer be secured correctly.
Do not remove the fan.

1. Check whether the condensate is draining off. To do this, carefully pour clear water through the evaporator into the inside of the outdoor unit.
2. If necessary, loosen the condensate hose from below. Remove any blockages, e.g. with the flexible cleaning brush from the "heat pump service set".

Closing the outdoor unit

Danger
The absence of system component earthing can lead to serious injury from electrical current and component damage in the event of an electrical fault.
- Before closing the indoor unit, restore all protective conductor connections.
- Check whether equipment and pipe connections are connected to the equipotential bonding of the building. Restore the connections if required.

Please note
If a casing door is not securely closed this can lead to damage from condensation, vibrations and excessive noise.
- Check all-round seal of front panel for damage.
- Close appliance correctly.
- On pipe and hose outlets, ensure the thermal insulation is seated correctly.

Please note
Leaking hydraulic connections cause appliance damage.
- Check the internal and on-site hydraulic connections for leaks.
- In the event of leaks, switch off the appliance immediately. Drain the heating water. Check the seal rings for correct fit. Replace any seal rings that may have become dislodged.

Closing the outdoor unit (cont.)

Closing the non-return valve (operating position)

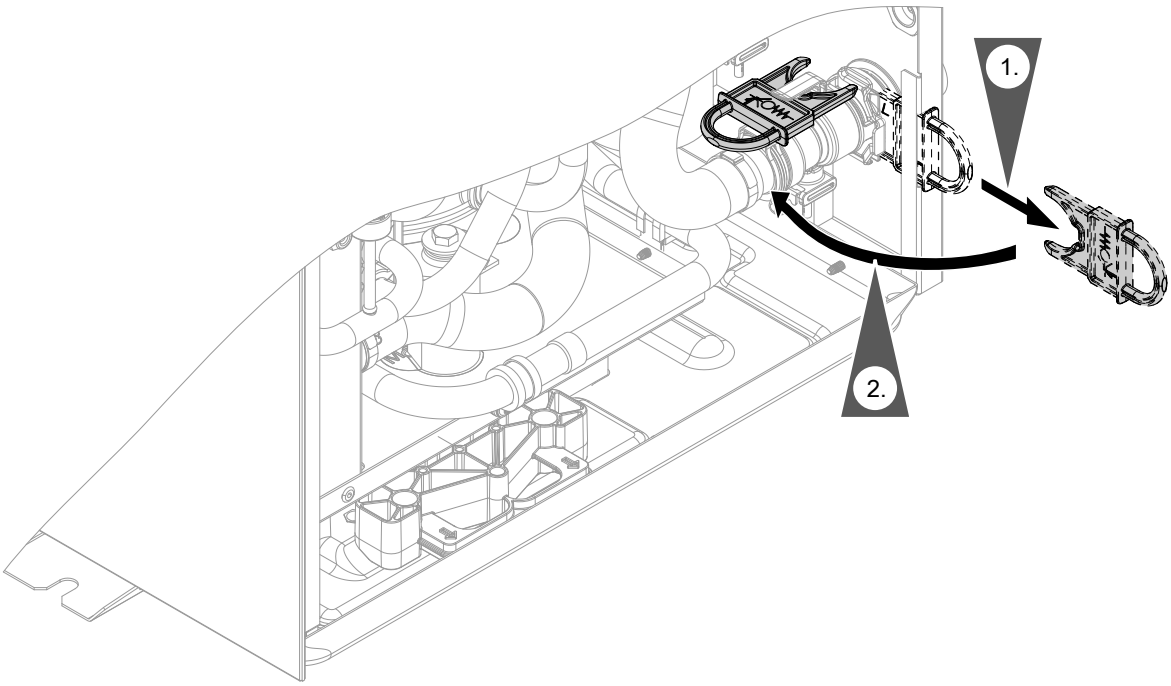

Fig. 46

Closing the outdoor unit (cont.)

Closing the outdoor unit

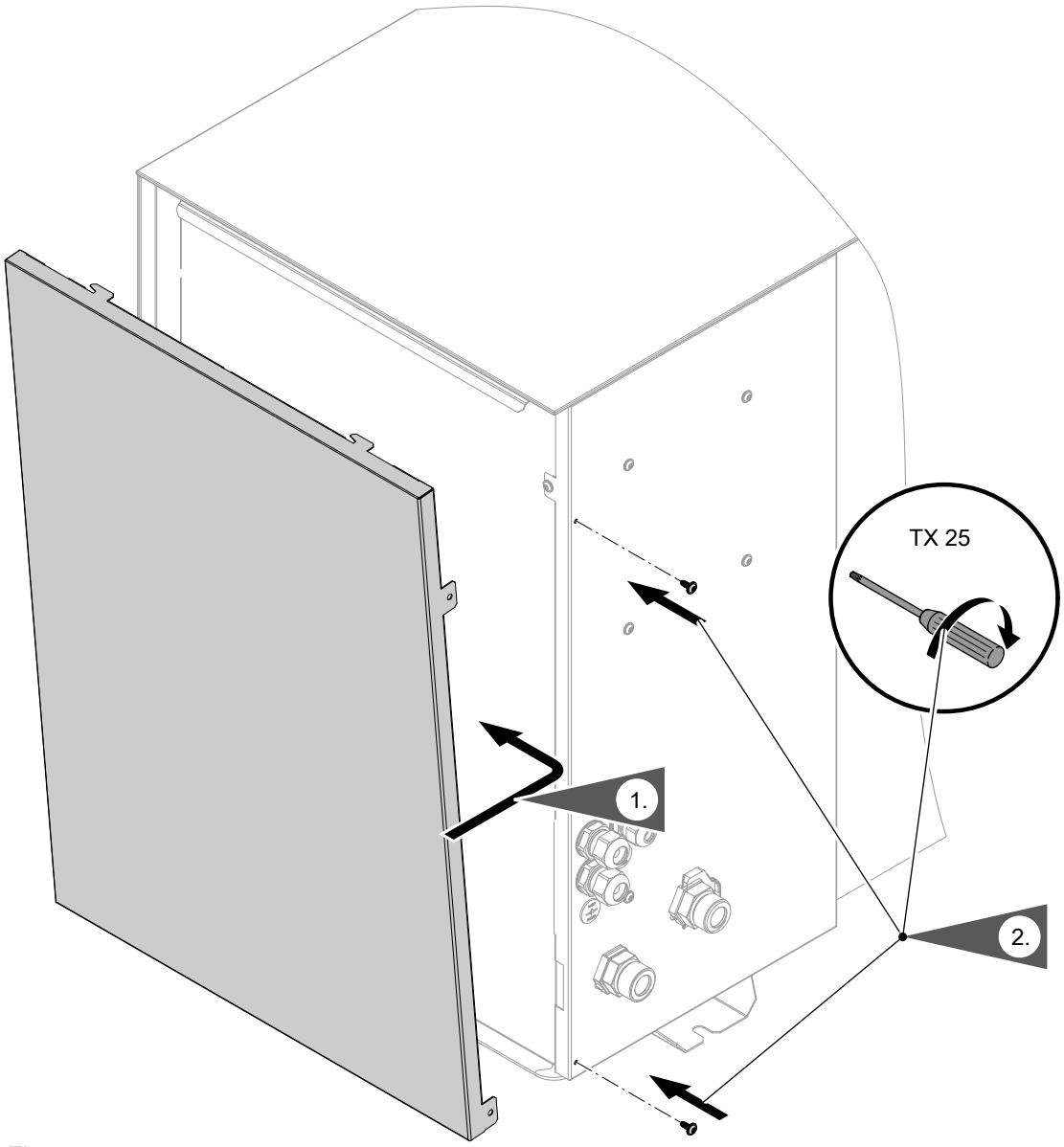

Fig. 47

3. Torque 1.5 +1.0 Nm

Checking the outdoor unit for noise

Check the outdoor unit for unusual noise.

Examples:
- Operating noise from the fan
- Operating noise from the compressor
- Vibration in the refrigerant circuit

Note
If noise problems occur due to sound transmission: See chapter "Sound transmission checklist".

Functions available via the service menu

Installation and service instructions for the indoor unit/heat pump control unit/system control unit

Parameters and messages

Parameters

Descriptions of the parameters are available online:
https://climate-solutions.com/documents/6257744

Fig. 48

Messages

The procedures for handling messages and the actions required are available online:
https://climate-solutions.com/documents/6257744

Fig. 49

Note
The possible faults vary according to the system equipment. Therefore, not all fault messages will come up for every system.

Please note
Repairing components that fulfil a safety function can compromise the safe operation of the system.
Faulty components must be replaced with original spare parts from the manufacturer.

Checklist for maintenance work

! **Please note**
Refrigerant can escape when working on the refrigerant circuit.
- It is essential that regulations and guidelines on handling refrigerant are always observed and adhered to: See "Safety instructions".
- Work on the refrigerant circuit must **only** be carried out by a certified contractor (in accordance with Regulations (EU) 2024/573 and (EU) 2015/2067).

! **Please note**
Repairing components that fulfil a safety function can compromise the safe operation of the system.
- Do not undertake any repairs on the inverter. Replace the inverter if there is a defect.
- Faulty components must be replaced with original spare parts from the manufacturer.

- Every person working on the refrigerant circuit must be able to produce a certificate of competence issued by an organisation with industry accreditation. This certificate confirms their competence in the safe handling of refrigerants by means of a standard industry procedure.
- Servicing work may only carried out in accordance with the manufacturer's specifications. If maintenance and repair work requires assistance from additional individuals, the person trained in the handling of flammable refrigerants must constantly supervise the work.
- Only AG145 and CuP 281a solders specified by the manufacturer in accordance with ISO 17672 may be used for soldering work on the refrigerant circuit.
- In order to minimise the risk of ignition, safety checks must be carried out **before** any work on appliances with flammable refrigerants can commence. Take the following measures **before** interfering with the refrigerant circuit:

Measure		Completed	Comments
1	**General working environment** ▪ Inform the following persons of the type of work to be carried out: − All maintenance personnel − All persons in the vicinity of the system. ▪ Shut off the area surrounding the outdoor unit. ▪ Survey the immediate surroundings of the outdoor unit for flammable materials and ignition sources: Remove all flammable, movable materials and all ignition sources.		
2	**Checking for the presence of refrigerant** ▪ In order to recognise a flammable atmosphere in time: Before, during and after the work, check the surrounding area for any escaping refrigerant, using an explosion-proof refrigerant detector suitable for R290. This refrigerant detector must not generate any sparks and must be suitably sealed.		
3	**Fire extinguisher** A CO_2 or powder extinguisher must be to hand in the following cases: ▪ Refrigerant is being extracted. ▪ Refrigerant is being topped up. ▪ Welding or brazing/soldering work is being carried out.		

Checklist for maintenance work (cont.)

	Measure	Completed	Comments
4	**Sources of ignition** ▪ When carrying out work on a refrigerant circuit that contains or previously contained flammable refrigerant, never use ignition sources that could ignite the refrigerant. Remove all possible ignition sources, including cigarettes, from the area where installation, repair, dismantling or disposal work is taking place that may result in refrigerant escaping. ▪ Before starting work, survey the immediate surroundings of the appliance for flammable materials and ignition sources: Remove all flammable, movable materials and all ignition sources. ▪ Display no smoking signs.		
5	**Ventilating the work location** ▪ Carry out repairs outdoors, or provide adequate ventilation for the work location before interfering with the refrigerant circuit or commencing any welding or brazing/soldering work. ▪ Ventilation must be maintained for the entire duration of the work. Ventilating should dilute any refrigerant that may escape and should ideally discharge it into the surrounding atmosphere.		
6	**Checking the refrigeration system** ▪ Any replacement electrical components must be suitable for the application and must correspond to the manufacturer's specification. Only replace faulty components with original spare parts from the manufacturer. ▪ Carry out all component replacements in accordance with the manufacturer's instructions. If required, consult the manufacturer's technical support. Perform the following checks: ▪ The refrigerant charge must not be greater than specified in the technical data. ▪ If a hydraulically separated system is used, check the secondary circuit for the presence of any refrigerant. ▪ Labels and symbols must always be clearly visible and legible. Replace any illegible information. ▪ Refrigerant lines and components must be installed in such a manner that they do not come into contact with substances that can cause corrosion. Exception: The refrigerant lines are made from corrosion-resistant materials or are reliably protected against corrosion.		
7	**Checks on electrical components** ▪ Safety checks must be carried out for maintenance and repair work on electrical components: See below. ▪ In the event of a safety-related fault, do not connect the system until the fault has been remedied. If it is not possible to remove the fault immediately, it may be necessary to provide a suitable interim solution for operating the system. Inform the system operator. Carry out the following safety checks: ▪ Discharge the capacitors: Ensure no sparks are created when discharging. ▪ Do not position any live electrical components or cables in the immediate vicinity of the outdoor unit when filling or extracting refrigerant or when flushing the refrigerant circuit. ▪ Check the earth connection.		

Checklist for maintenance work (cont.)

	Measure	Completed	Comments
8	**Repairs on sealed enclosures** Sealed electrical components must **not** be repaired.		
9	**Repairs on components that are suitable for flammable atmospheres** ▪ Do not connect any continuous capacitive or inductive loads to the appliance unless it has been ensured that the permissible voltages and currents are not exceeded. ▪ In areas where flammable atmospheres exist, only apply voltage to components which are suitable for flammable atmospheres. ▪ Only use original parts from the manufacturer or components approved by the manufacturer. Other parts may result in refrigerant becoming ignited in the event of a leak.		
10	**Wiring** ▪ Check whether the wiring is subject to wear, corrosion, tension, vibration, sharp edges or other unfavourable environmental influences. ▪ When checking, also take into account the effects of ageing and continuous vibration on the compressor and fans.		
11	**Refrigerant detectors** ▪ On no account use possible ignition sources for refrigerant detection or leak detection. ▪ Flame leak detectors or other detectors with open flames must not be used.		
12	**Leak detection** The following leak detection processes are suitable for appliances with flammable refrigerant: Leak detection with electronic refrigerant detectors: ▪ Electronic refrigerant detectors may not have the required sensitivity or may need to be calibrated to the relevant range. Carry out the calibration in refrigerant-free surroundings. ▪ The refrigerant detector must be suitable for the R290 refrigerant to be detected. ▪ The refrigerant detector must not contain any potential ignition sources. ▪ Calibrate the refrigerant detector to the refrigerant used. Set the response threshold to < 3 g/a, suitable for propane. Leak detection with liquid leak detectors: ▪ Liquid leak detectors are suitable for use with most refrigerants. ! **Please note** Liquid leak detectors containing chlorine may react with the refrigerant. This could result in corrosion. Do not use liquid leak detectors that contain chlorine. Measures to take if a leak in the refrigerant circuit occurs or is suspected: ▪ Immediately extinguish all open flames in the vicinity of the heat pump. ▪ If brazing/soldering work needs to be undertaken to remedy the leak, always extract all the refrigerant from the refrigerant circuit. Purge the site to be brazed/soldered before and during the brazing/soldering work with oxygen-free nitrogen.		
13	**Extracting refrigerant** Carry out the work in accordance with chapter "Extracting refrigerant".		

▶▶

Checklist for maintenance work (cont.)

Measure		Completed	Comments
14	**Testing pressure resistance** Carry out the work according to chapter "Testing pressure resistance".		
15	**Filling the refrigerant circuit** Carry out the work in accordance with chapter "Filling the refrigerant circuit".		
16	**Shutdown** Carry out the work in accordance with chapter "Final decommissioning and disposal".		
17	**Identification** (labelling the heat pump) If the heat pump has been taken out of use, affix a label to the outdoor unit in a clearly visible position containing the following information with date and signature: ▪ Outdoor unit works with flammable refrigerant R290 (propane). ▪ System has been taken out of use. ▪ Refrigerant has been extracted. ▪ Outdoor unit contains nitrogen. ▪ Outdoor unit may contain residual flammable refrigerant.		

Overview of electrical components

⚠ **Danger**
Contact with live components can lead to serious injury from electric current. Some components on PCBs remain live even after the power supply has been switched off.
- **Do not touch** electrical terminal areas.
- When working on the indoor or outdoor unit, isolate the system from the power supply, e.g. at a separate fuse or a main switch. Check that no voltage is present. Safeguard against unauthorised reconnection.
- Before working on the appliance, wait at least 4 min until the voltage has dropped out.

⚠ **Danger**
The absence of system component earthing can lead to serious injury from electrical current and component damage in the event of an electrical fault.
All earth conductor connections **must** be reconnected.
The appliance and pipework must be connected to the equipotential bonding of the building.

Overview of electrical components (cont.)

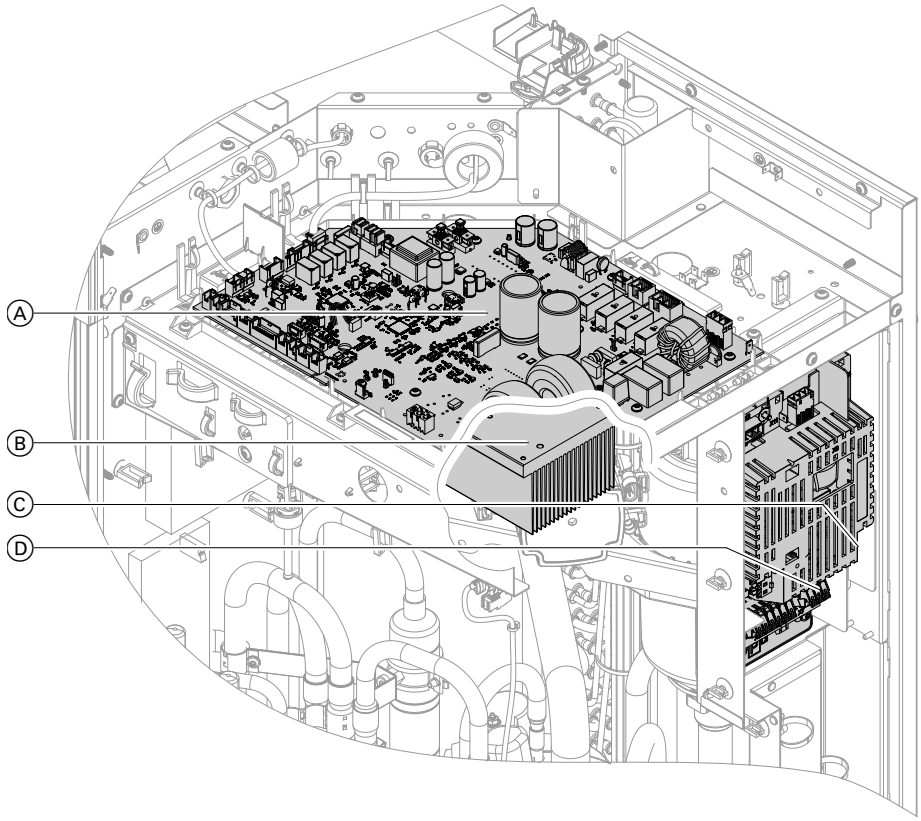

Fig. 50

Ⓐ OCU refrigerant circuit controller
Ⓑ Heat sink
Ⓒ CAN bus terminals
Ⓓ Mains terminals 230 V~

OCU refrigerant circuit controller

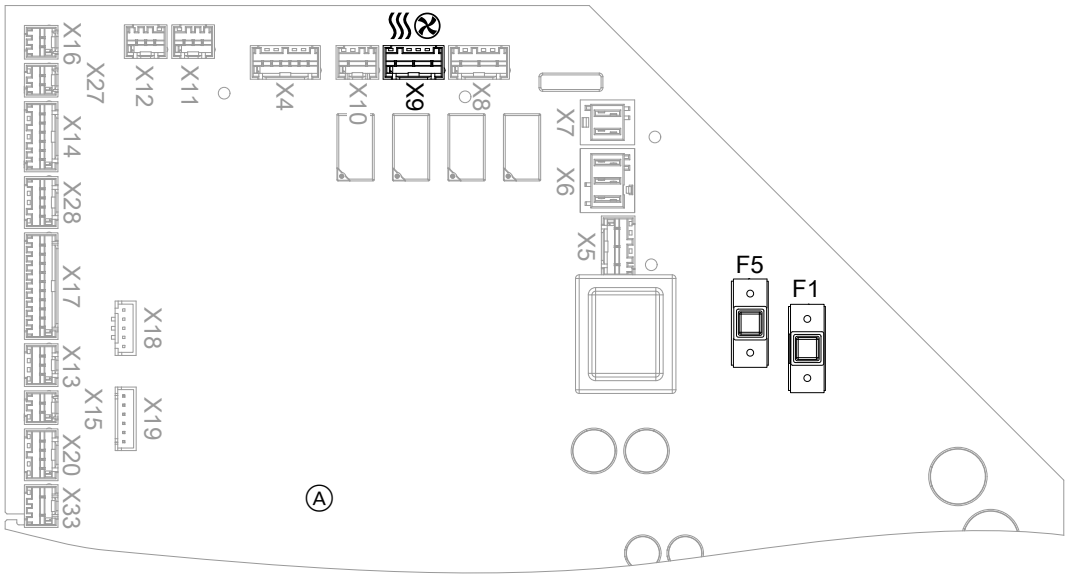

Fig. 51

Ⓐ OCU refrigerant circuit controller
F3 6.3 A H (slow), 250 V~
Max. power loss ≤ 2.5 W
F5 6.3 A H (slow), 250 V~
Max. power loss ≤ 2.5 W
X9 Connection for fan ring heater (EB4, accessories)

Overview of internal components

Danger
Contact with live components can lead to serious injury from electric current. Some components on PCBs remain live even after the power supply has been switched off.

- When working on the outdoor unit, isolate the system from the power supply, e.g. at a separate MCB/fuse or a mains isolator. Check the system is no longer live and safeguard against reconnection.
- Prior to working on the appliance, wait at least 4 min until the voltage on the charged capacitors has completely dropped out.

Outdoor unit, sizes 06 to 08

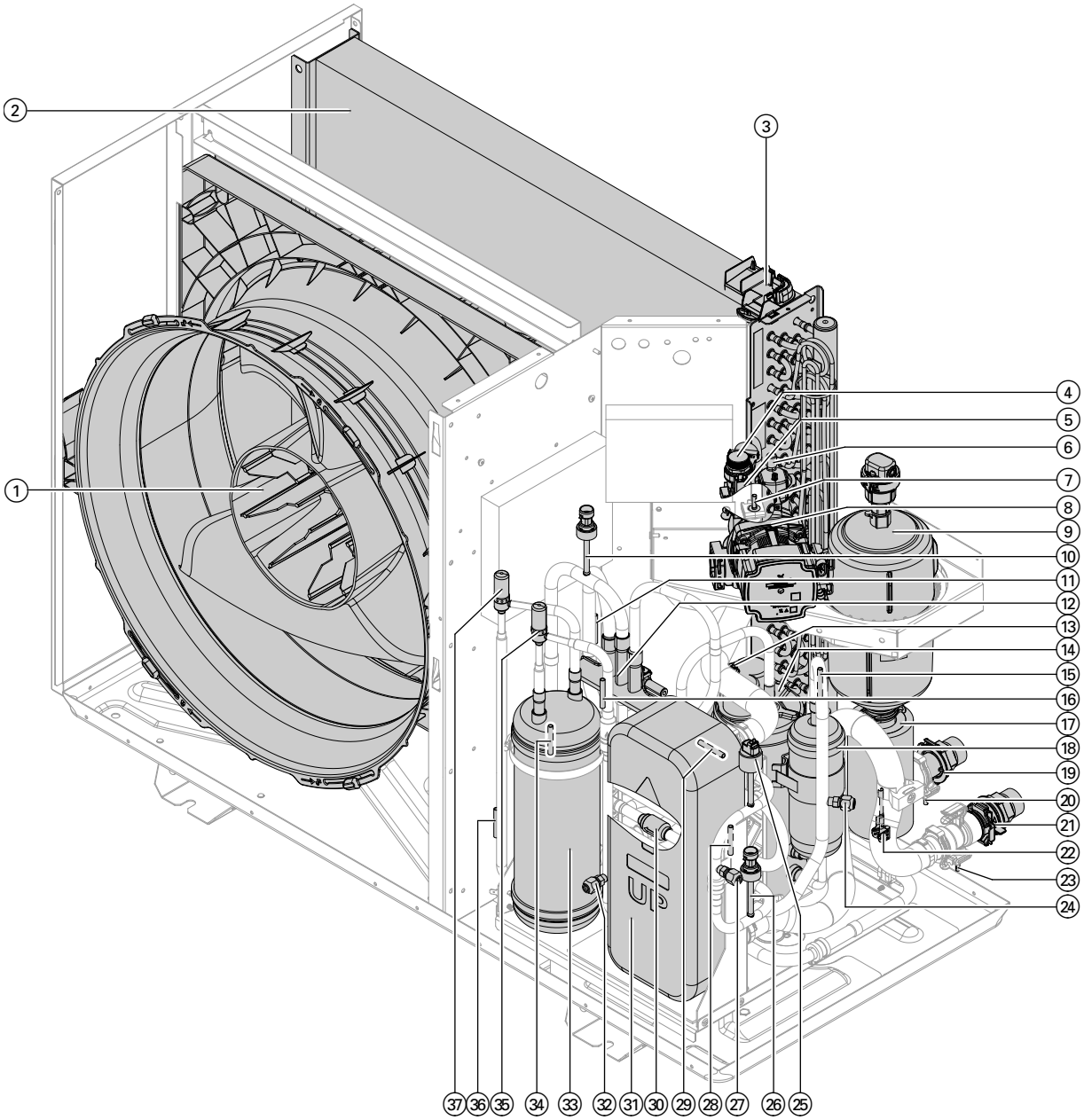

Fig. 52

① Fan
② Evaporator
③ Primary circuit inlet temperature sensor (BT07)
④ Safety valve 3 bar (0.3 MPa)

6260605

Overview of internal components (cont.)

⑤ Heating water pressure sensor (BP03)
⑥ Air vent valve
⑦ Secondary circuit flow temperature sensor downstream of condenser (BT01)
⑧ Central circulation pump (secondary pump)
⑨ Float air vent valve with quick-action air vent valve
⑩ Low pressure sensor (BP02, green)
⑪ Suction gas temperature sensor – evaporator (BT03)
⑫ 4-way diverter valve
⑬ Protective temperature limiter (BT11)
⑭ Compressor with oil sump heater
⑮ Evaporator inlet temperature sensor (BT13)
⑯ Liquid gas temperature sensor – condenser (BT02)
⑰ Instantaneous heating water heater
⑱ Compressor accumulator
⑲ Heating water flow
⑳ Flow temperature sensor for secondary circuit, downstream of instantaneous heating water heater (BT17)
㉑ Non-return valve, secondary circuit
㉒ Safety temperature sensor 1, instantaneous heating water heater (BT19)
And
Safety temperature sensor 2, instantaneous heating water heater (BT20)
㉓ Secondary circuit return temperature sensor (BT18)
㉔ Schrader valve, low pressure side
㉕ Safety high pressure switch PSH (BP04)
㉖ High pressure sensor (BP01, black)
㉗ Schrader valve, high pressure side 1
㉘ Oil sump temperature sensor (BT08)
㉙ Compressor hot gas temperature sensor (BT04)
㉚ Refrigerant circuit non-return valve
㉛ Condenser
㉜ Schrader valve, high pressure side 2
㉝ Refrigerant receiver
㉞ Suction gas temperature sensor – compressor (BT05)
㉟ Electronic expansion valve 1
㊱ Liquid gas temperature sensor – cooling (BT06)
㊲ Electronic expansion valve 2

Overview of internal components (cont.)

Outdoor unit, sizes 10 to 12

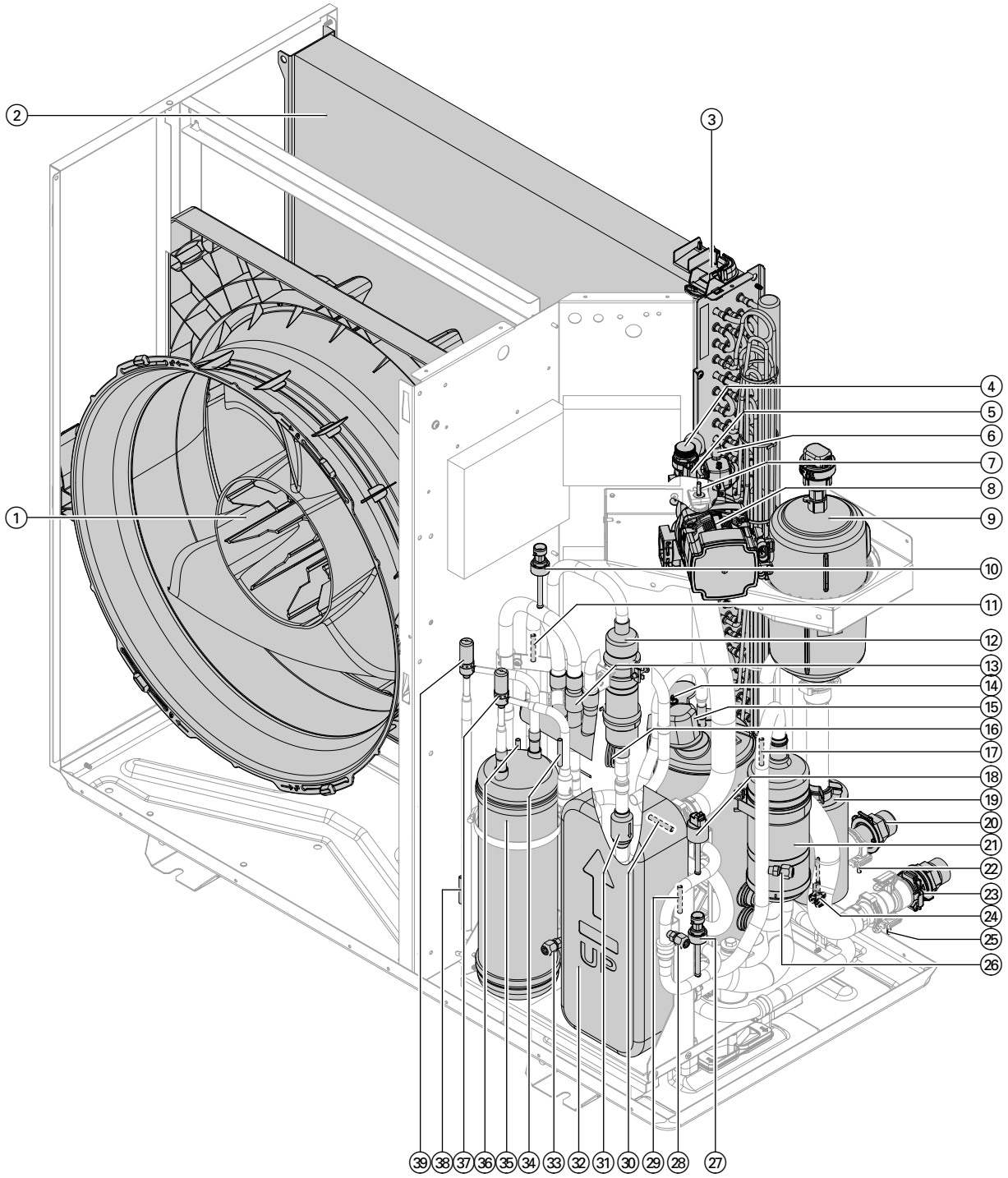

Fig. 53

① Fan
② Evaporator
③ Primary circuit inlet temperature sensor (BT07)
④ Safety valve 3 bar (0.3 MPa)
⑤ Heating water pressure sensor (BP03)
⑥ Air vent valve
⑦ Secondary circuit flow temperature sensor downstream of condenser (BT01)
⑧ Central circulation pump (secondary pump)
⑨ Float air vent valve with quick-action air vent valve
⑩ Low pressure sensor (BP02, green)
⑪ Suction gas temperature sensor – evaporator (BT03)
⑫ Oil separator
⑬ 4-way diverter valve
⑭ Protective temperature limiter (BT11)
⑮ Compressor with oil sump heater
⑯ Capillary tube
⑰ Evaporator inlet temperature sensor (BT13)
⑱ Safety high pressure switch PSH (BP04)
⑲ Instantaneous heating water heater
⑳ Heating water flow

6260605

Overview of internal components (cont.)

㉑ Compressor accumulator
㉒ Flow temperature sensor for secondary circuit, downstream of instantaneous heating water heater (BT17)
㉓ Non-return valve, secondary circuit
㉔ Safety temperature sensor 1, instantaneous heating water heater (BT19)
And
Safety temperature sensor 2, instantaneous heating water heater (BT20)
㉕ Secondary circuit return temperature sensor (BT18)
㉖ Schrader valve, low pressure side
㉗ High pressure sensor (BP01, black)
㉘ Schrader valve, high pressure side 1
㉙ Oil sump temperature sensor (BT08)
㉚ Compressor hot gas temperature sensor (BT04)
㉛ Refrigerant circuit non-return valve
㉜ Condenser
㉝ Schrader valve, high pressure side 2
㉞ Liquid gas temperature sensor – condenser (BT02)
㉟ Refrigerant receiver
㊱ Suction gas temperature sensor – compressor (BT05)
㊲ Electronic expansion valve 1
㊳ Liquid gas temperature sensor – cooling (BT06)
㊴ Electronic expansion valve 2

Draining the outdoor unit on the secondary side

If only the outdoor unit is to be drained, shut off the hydraulic lines to the indoor unit. To do this, open the non-return valve: see Fig. 55

Draining the outdoor unit on the secondary side (cont.)

Opening the outdoor unit

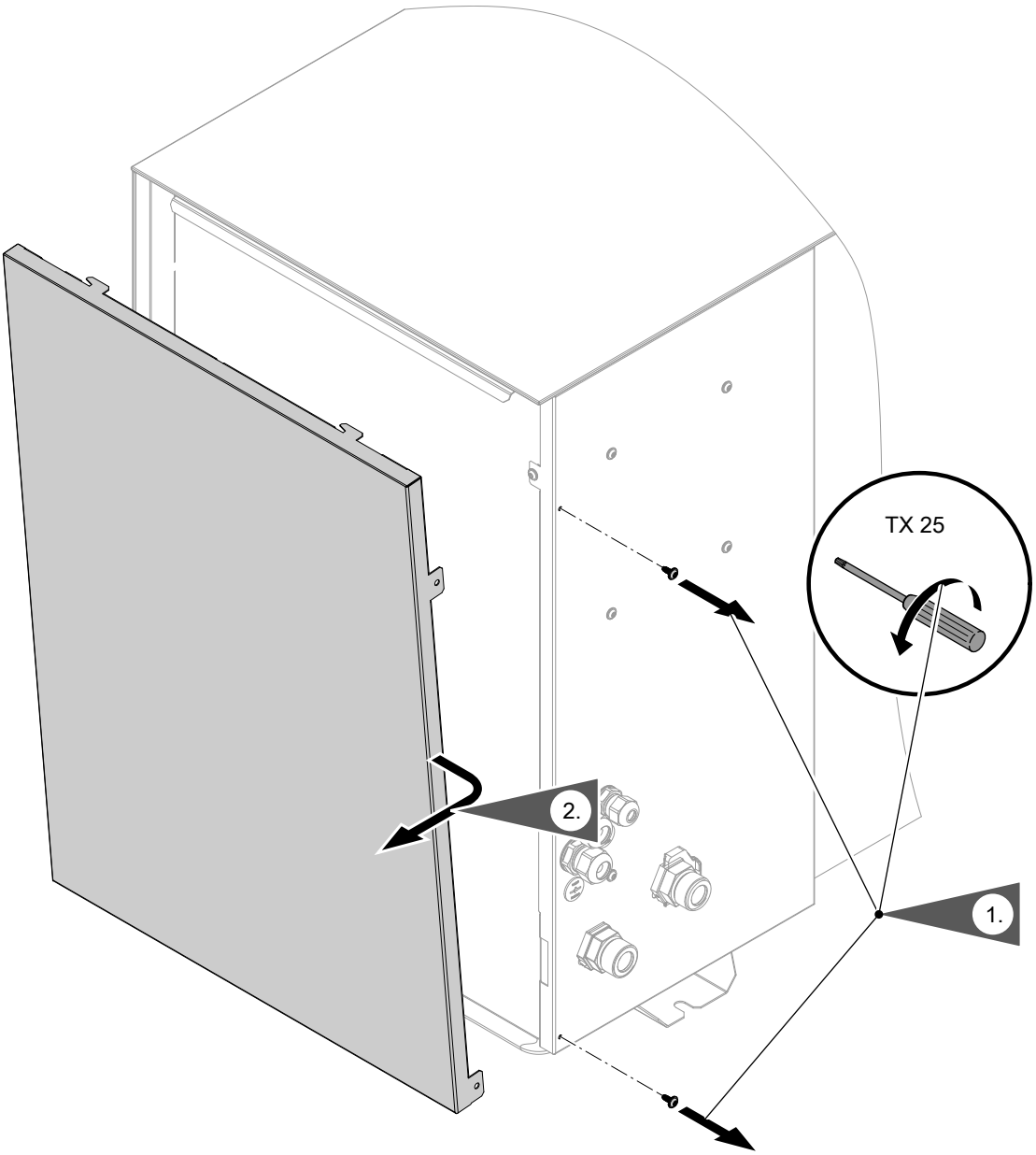

Fig. 54

Draining the outdoor unit on the secondary side (cont.)

Opening the non-return valve

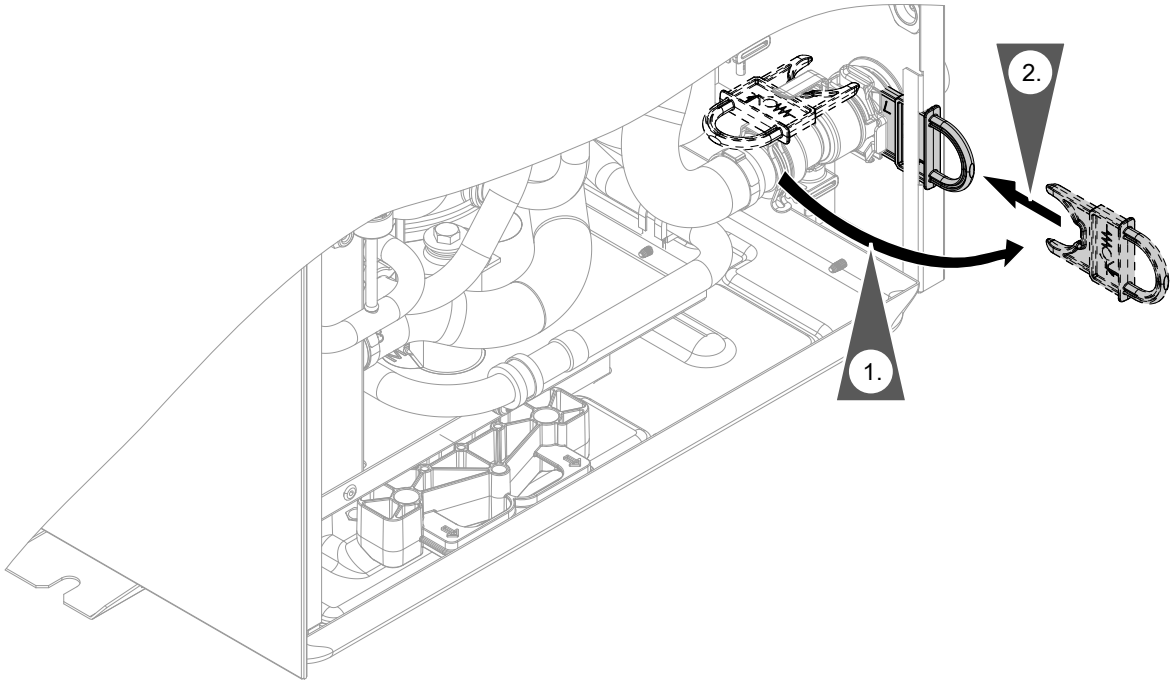

Fig. 55

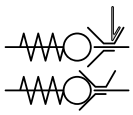

Key inserted in the non-return valve: Non-return valve open (filling position)
Key removed from the non-return valve: Non-return valve closed (operating position)

Draining the outdoor unit

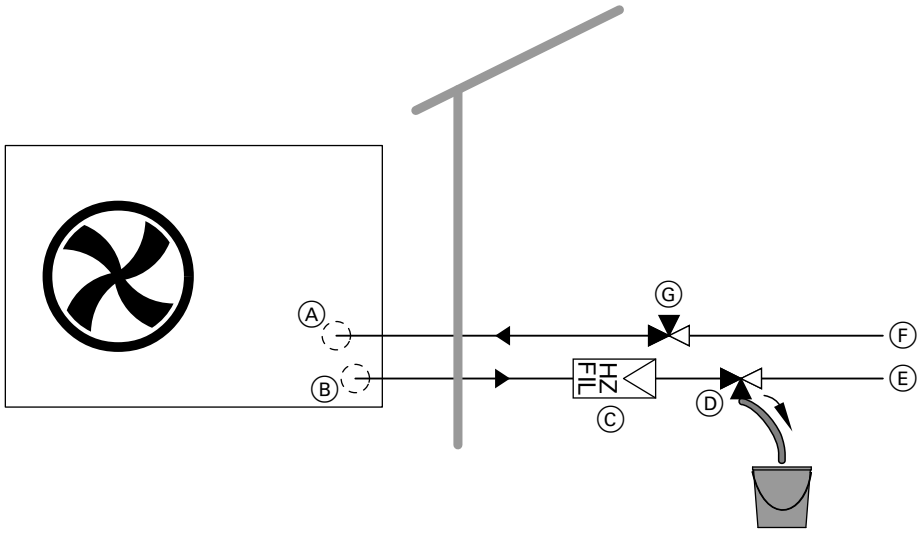

Fig. 56

Ⓐ Heating water flow from the outdoor unit
Ⓑ Heating water return to the outdoor unit
Ⓒ Heating filter (on site or part of standard delivery for outdoor unit)
Ⓓ 3/2-way ball valve in the heating water return of the outdoor unit (on site or part of standard delivery for indoor unit):
Open in the direction of the outdoor unit
Ⓔ To the secondary circuit
Ⓕ From the secondary circuit
Ⓖ 3/2-way ball valve in the heating water flow of the outdoor unit (on site or part of standard delivery for indoor unit):
Open in the direction of the outdoor unit

Refrigerant circuit flow diagrams

Labelling of the sensors in acc. with EN 1861:

- BT Temperature sensor
- BT Protective temperature limiter
- BP Low pressure sensor
- BP High pressure sensor
  or
  High pressure switch PSH

Heating mode

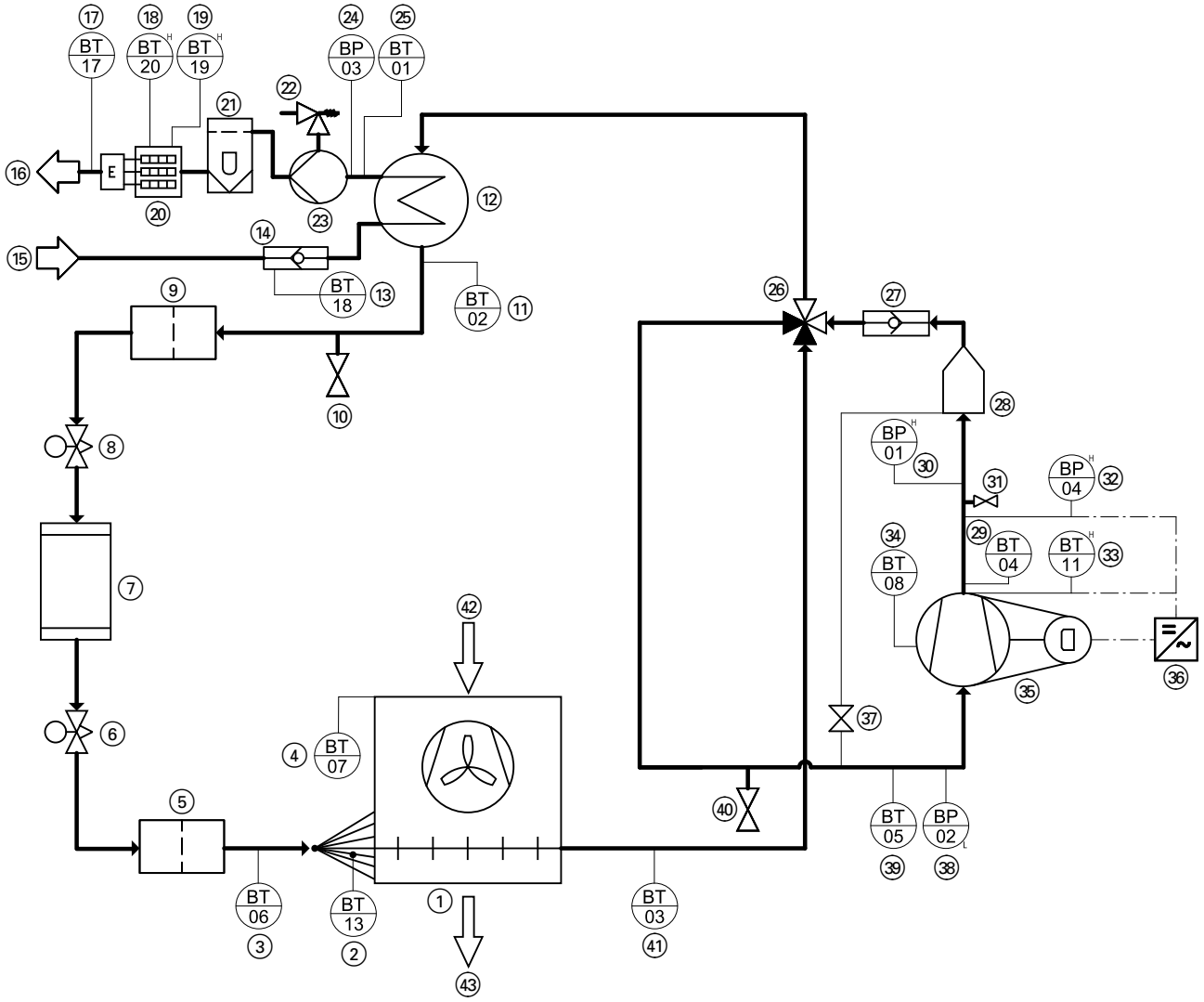

Fig. 57

1. Evaporator
2. Evaporator inlet temperature sensor (BT13)
3. Liquid gas temperature sensor – cooling (BT06)
4. Primary circuit inlet temperature sensor (BT07)
5. Filter, electronic expansion valve 2
6. Electronic expansion valve 2
7. Refrigerant receiver
8. Electronic expansion valve 1
9. Filter, electronic expansion valve 1
10. Schrader valve, high pressure side 2
11. Liquid gas temperature sensor – condenser (BT02)
12. Condenser
13. Secondary circuit return temperature sensor (BT18)
14. Non-return valve, secondary circuit
15. Secondary circuit return
16. Secondary circuit flow
17. Flow temperature sensor for secondary circuit, downstream of instantaneous heating water heater (BT17)
18. Safety temperature sensor 2, instantaneous heating water heater (BT20)
19. Safety temperature sensor 1, instantaneous heating water heater (BT19)
20. Instantaneous heating water heater
21. Float air vent valve with quick-action air vent valve

Refrigerant circuit flow diagrams (cont.)

㉒ Safety valve 3 bar (0.3 MPa)
㉓ Central circulation pump (secondary pump)
㉔ Heating water pressure sensor (BP03)
㉕ Flow temperature sensor, secondary circuit downstream of condenser (BT01)
㉖ 4-way diverter valve
㉗ Refrigerant circuit non-return valve
㉘ Only for sizes 10 to 12:
Oil separator
㉙ Hot gas temperature sensor for compressor (BT04)
㉚ High pressure sensor (BP01)
㉛ Schrader valve, high pressure side 1
㉜ Safety high pressure switch PSH (BP04)
㉝ Protective temperature limiter (BT11)
㉞ Oil sump temperature sensor (BT08)
㉟ Compressor with oil sump heater
㊱ Inverter
㊲ Only for sizes 10 to 12:
Capillary tube
㊳ Low pressure sensor (BP02)
㊴ Suction gas temperature sensor – compressor (BT05)
㊵ Schrader valve, low pressure side
㊶ Evaporator suction gas temperature sensor (BT03)
㊷ Air inlet
㊸ Air outlet

Cooling mode

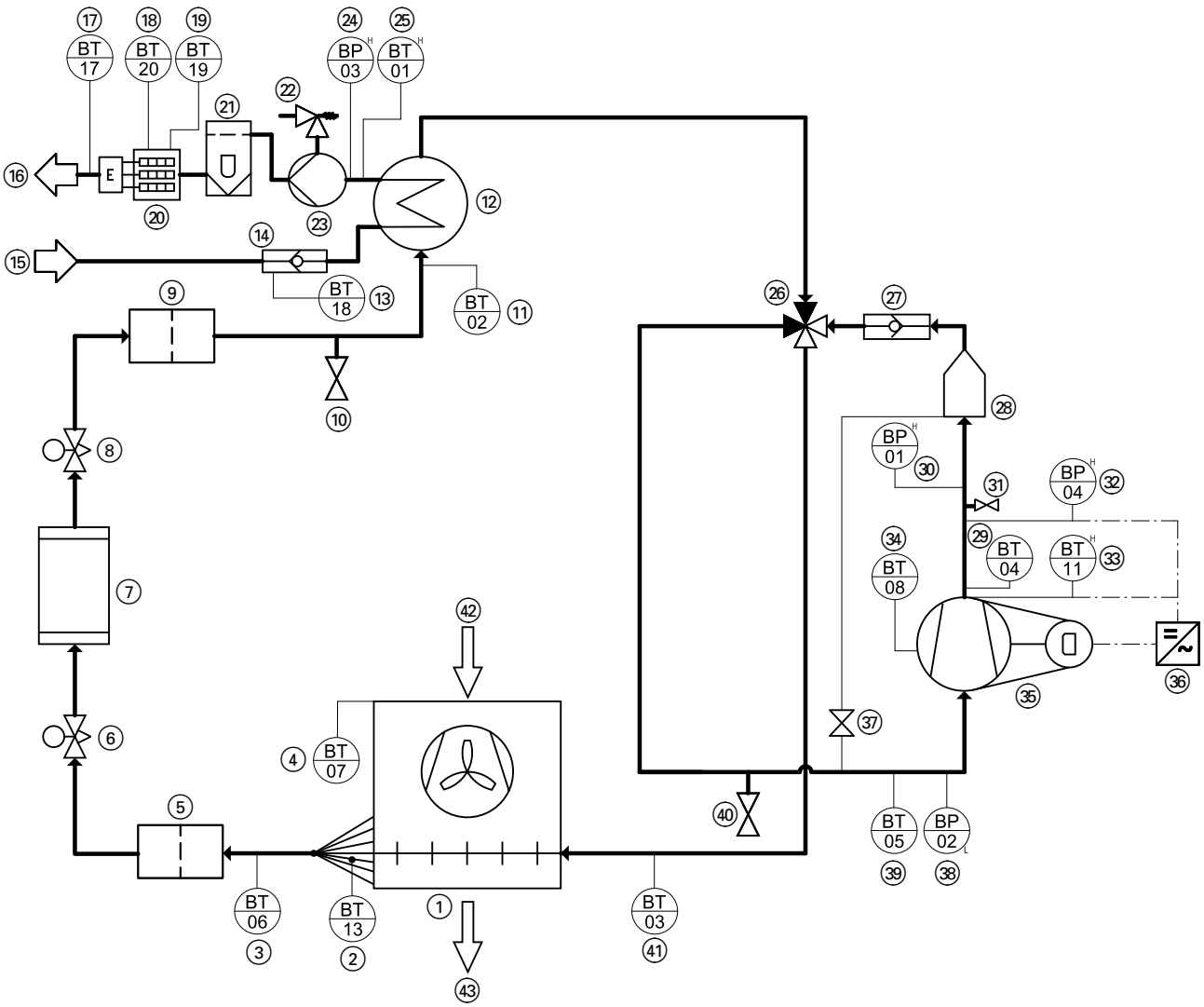

Fig. 58

① Evaporator
② Evaporator inlet temperature sensor (BT13)
③ Liquid gas temperature sensor – cooling (BT06)
④ Primary circuit inlet temperature sensor (BT07)
⑤ Filter, electronic expansion valve 2
⑥ Electronic expansion valve 2
⑦ Refrigerant receiver
⑧ Electronic expansion valve 1
⑨ Filter, electronic expansion valve 1
⑩ Schrader valve, high pressure side 2
⑪ Liquid gas temperature sensor – condenser (BT02)
⑫ Condenser

Refrigerant circuit flow diagrams (cont.)

⑬ Secondary circuit return temperature sensor (BT18)
⑭ Non-return valve, secondary circuit
⑮ Secondary circuit return
⑯ Secondary circuit flow
⑰ Flow temperature sensor for secondary circuit, downstream of instantaneous heating water heater (BT17)
⑱ Safety temperature sensor 2, instantaneous heating water heater (BT20)
⑲ Safety temperature sensor 1, instantaneous heating water heater (BT19)
⑳ Instantaneous heating water heater
㉑ Float air vent valve with quick-action air vent valve
㉒ Safety valve 3 bar (0.3 MPa)
㉓ Central circulation pump (secondary pump)
㉔ Heating water pressure sensor (BP03)
㉕ Flow temperature sensor, secondary circuit downstream of condenser (BT01)
㉖ 4-way diverter valve
㉗ Refrigerant circuit non-return valve
㉘ Only for sizes 10 to 12: Oil separator
㉙ Hot gas temperature sensor for compressor (BT04)
㉚ High pressure sensor (BP01)
㉛ Schrader valve, high pressure side 1
㉜ Safety high pressure switch PSH (BP04)
㉝ Protective temperature limiter (BT11)
㉞ Oil sump temperature sensor (BT08)
㉟ Compressor with oil sump heater
㊱ Inverter
㊲ Only for sizes 10 to 12: Capillary tube
㊳ Low pressure sensor (BP02)
㊴ Suction gas temperature sensor – compressor (BT05)
㊵ Schrader valve, low pressure side
㊶ Evaporator suction gas temperature sensor (BT03)
㊷ Air inlet
㊸ Air outlet

Extracting the refrigerant

Before starting work, note the "Checklist for maintenance work" on page 71 onwards.

Also take into account the following points:
- Only extraction equipment authorised for R290 (propane) that has been regularly inspected may be used.
  Check the condition of the extraction equipment, including the service record.
- Only use refrigerant bottles suitable for R290, e.g. special recycling bottles. The refrigerant bottles must be correspondingly labelled.
  The refrigerant bottles must be equipped with a safety valve and permanently attached shut-off valves.
- Check whether a sufficient number of recycling bottles is available.
- Do not mix together different refrigerants in a single recovery bottle.
- Have suitable transport equipment ready for the refrigerant bottles (if required).
- Check the availability of personal protective equipment and its proper use.
- Ensure the refrigerant circuit and all connections used are free from leaks.
- Provide calibrated scales to determine the amount of extracted refrigerant.

1. Test the earth conductor. Check earth conductor for correct connection.
2. **Open expansion valves via actuator test:**
   Note
   *If not all actuator tests and function checks are displayed, **first** update the software of the programming unit and all electronics modules via ViGuide.*

   - Select an actuator test for the refrigerant circuit.
   - Set expansion valves 1 and 2 to 100 %.

   Installation and service instructions for the indoor unit/heat pump control unit/system control unit

   As soon as the actuator test is active, this is indicated via a progress bar.
3. **Isolate the outdoor unit from the power supply:**
   Isolate the outdoor unit from the power supply, e.g. at separate fuses. Check that no voltage is present. Safeguard against unauthorised reconnection.

   Danger
   Contact with live components can result in severe injuries. Some components on PCBs remain live even after the power supply has been switched off.
   Before removing any covers, wait at least 4 min for the voltage to drop out.

Extracting the refrigerant (cont.)

4. **Disconnecting the CAN bus connection**
   Disconnect the CAN bus communication cable for the indoor/outdoor unit from the outdoor unit.

5. **Prepare the outdoor unit on the secondary side:**
   Note
   Hot heating water in the outdoor unit makes it easier to extract the refrigerant.

   Either set heating mode via the actuator test:
   - Set the position of the 4/3-way valve (for combination of outdoor and indoor units with integral hydraulics) or 3/2-way valve (on site for combination of outdoor unit and controller) to **"Heating"**.
   - Set the speed of the **"Central heating circuit pump"** (secondary pump) to 100 %.

   Installation and service instructions for the indoor unit/heat pump control unit/system control unit

   As soon as the actuator test is active, this is indicated via a progress bar.
   Or: Drain the outdoor unit on the secondary side.

6. **Prepare to extract the refrigerant:**
   Check that the safety instructions for working on the refrigerant circuit are being adhered to: See "Safety instructions".

   Danger
   Pressure fluctuations occur when the refrigerant circuit is drained. These pressure fluctuations can cause the heating water in the condenser to freeze and the condenser to burst.
   Ensure frost protection on the heating water side: See steps 5 and 6.

   Danger
   Escaping refrigerant can lead to explosions that result in very serious injuries.
   Do not introduce any power sources or ignition sources into the safety zone.

7. Place the refrigerant bottle on the scales.
   Only use explosion-proof scales within the safety zone.

8. **Connect the refrigerant bottle:**
   Earth the refrigerant bottle to prevent sparks.
   Connect the refrigerant bottle to the extraction equipment. Connect the extraction equipment to the Schrader valves on high pressure side 1 and low pressure side 2 of the refrigerant circuit via the manifold.

9. **Extract the refrigerant:**
   Use the extraction equipment to extract the refrigerant **simultaneously** through the Schrader valves on high pressure side 1, high pressure side 2 and the low pressure side from all parts of the refrigerant circuit.

   Note
   - *Refrigerant extraction must be continuously monitored or carried out by a contractor authorised and certified to handle the refrigerant R290.*
   - *Do not overfill the refrigerant bottle; max. 80 % of the permissible charge weight.*
   - *Do not exceed the permissible design pressure of the refrigerant bottle.*
   - *Do not mix the refrigerant with other refrigerants.*
   - *Observe the following technical rules on operational reliability and hazardous materials: TRGS 510, TRBS 3145, TRGS 745*

10. Separate the refrigerant bottle from the refrigerant circuit. Close the refrigerant bottle connections securely. Label the refrigerant bottle according to the statutory requirements. Dispose of the refrigerant bottle in a suitable disposal/recycling facility.

11. **Purge the refrigerant circuit:**
    Purge the refrigerant circuit with dry nitrogen for at least 5 min. Note the direction of flow through the compressor: See chapter "Refrigerant circuit flow diagrams".
    Nitrogen purge pressure: < 1 bar (< 100 kPa)
    Recommendation: After purging, check the concentration of refrigerant R290 in the nitrogen. Use an explosion-proof refrigerant detector suitable for R290 for this purpose.

    Explosion limits for R290:
    - Lower explosion limit (LEL): 1.7 % by vol. ≙ 17,000 ppm
    - Upper explosion limit (UEL): 10.8 % by vol. ≙ 108,000 ppm

12. **Evacuate the refrigerant circuit:**
    Evacuate the refrigerant circuit.
    Absolute pressure for vacuum according to EN 378: < 2.7 mbar (< 270 Pa)

    Danger
    Escaping refrigerant can lead to explosions that result in very serious injuries.
    Ensure the vacuum pump outlet is outside the safety zone.

13. Carry out a static vacuum test.

Extracting the refrigerant (cont.)

14. Repeat steps 10 to 14 until there is no more refrigerant in the refrigerant circuit.

Note
- *At low outside temperatures, evacuation of the refrigerant circuit takes longer.*
- *For the final purging process, release the positive pressure down to atmospheric pressure. Do not evacuate further.*
  This is especially important if brazing/soldering work is to be carried out on the refrigerant circuit.

If the work is interrupted:
*If the work steps described here are interrupted, the refrigerant circuit **must** be sealed to prevent refrigerant leakage (gas-tight).*

15. Mark the outdoor unit:
Affix a label to the outdoor unit in a clearly visible position, containing the following information, with date and signature:
- Outdoor unit uses flammable refrigerant R290 (propane).
- System has been taken out of use.
- Refrigerant has been extracted.
- Outdoor unit contains nitrogen.
- Outdoor unit may contain residual flammable refrigerant.

Procedure for replacing components in the refrigerant circuit

Observe the following when working on the refrigerant circuit:
- When replacing components in the refrigerant circuit, comply with the applicable national regulations.
  If these national regulations require a pressure resistance test, the limits specified in chapter "Testing pressure resistance" must be complied with.
- Wear suitable personal protective equipment when carrying out any work.
- Work on the refrigerant circuit with flammable refrigerant in safety group A3 may only be carried out by authorised contractors.
  These contractors must be trained in accordance with EN 378 Part 4 or IEC 60335-2-40, Section HH. The certificate of competence from an industry-accredited body is required.
- Brazing/soldering work on the refrigerant circuit may only be carried out by contractors certified in accordance with ISO 13585 and AD 2000, datasheet HP 100R. And only by contractors qualified and certified for the processes to be carried out.
  The work must fall within the range of applications purchased and be carried out in accordance with the prescribed procedures.
- Brazing/soldering work on accumulator connections requires certification of personnel and processes by a notified body according to the Pressure Equipment Directive (2014/68/EU).

Danger
Explosion hazard: Brazing/soldering work on the refrigerant circuit can cause scale to form on the soldered seam. Scale reduces the pressure resistance of the soldered seam.

Nitrogen prevents the formation of scale. Continuously purge the refrigerant circuit with dry nitrogen during brazing/soldering work:
- Nitrogen purge pressure: < 1 bar (< 100 kPa)
- Both electronic expansion valves must remain fully open for the duration of the purging process.
- Flow direction for the nitrogen via the Schrader valves on the low pressure and high pressure side: See chapter "Refrigerant circuit flow diagrams".
  Position of the Schrader valves: See chapter "Overview of internal components".

1. Observe the safety information for work on the refrigerant circuit: See "Safety information".

Danger
Escaping refrigerant can lead to explosions that result in very serious injuries.
- Do not introduce any power sources or ignition sources into the safety zone.
- Ensure that the system is de-energised.

2. Prepare to work on the refrigerant circuit: See chapter "Checklist for maintenance work".

3. Drain the refrigerant circuit completely: See chapter "Extracting the refrigerant".

Procedure for replacing components in the… (cont.)

4. Disconnect the electrical connections: See chapter "Electrical connection of the outdoor unit" and "Overview of electrical components".

5. Open the outdoor unit: See chapter "Removing the outer casing".

6. If components on the secondary side are removed, first drain the outdoor unit on the secondary side: See chapter "Draining the outdoor unit on the secondary side".

7. Remove the required component from the refrigerant circuit.

   Separate installation instructions for the component

   Open the refrigerant circuit at the corresponding solder joints of the component to be replaced using a soldering tool or pipe cutter.

   Please note
   The heat of the soldering flame can damage refrigerant circuit components, electrical cables and electrical components.
   - Protect refrigerant circuit components that are not being replaced from the heat of the soldering flame.
   - Position electrical cables such that they are not damaged by the soldering flame. Undo cable ties if necessary.
   - Protect electrical components from the soldering flame. Remove if necessary.

   Danger
   Explosion hazard due to outgassing of oxygen from compressor oil residues in components of the refrigerant circuit.
   Ensure good ventilation when transporting components removed from the refrigerant circuit.
   Store components in well ventilated areas. This applies in particular to compressors and accumulators.

8. Install the spare part **and** filter dryer.

   Please note
   Residual moisture in the refrigerant circuit greatly reduces the service life of the outdoor unit.
   After opening the refrigerant circuit, **always** install the filter dryer:
   "Filter dryer spare parts kit"

   Please note
   The heat of the soldering flame can damage refrigerant circuit components.
   Observe the max. permissible temperature of the spare part. Observe the manufacturer's instructions. Cool the spare part during installation.

   Installation is carried out in reverse order to removal.
   - Use the new gaskets provided.
   - Insulate the sensors and secure with cable ties (included in standard delivery of spare part).
   - Secure electrical cables with cable ties if necessary.
   - Install electrical components if necessary.

Testing pressure resistance

If national regulations require a pressure resistance test, the limits specified below must be complied with.

Danger
Excessive pressure can cause damage to the system and hazards due to high pressure and escaping refrigerant.
Observe the permissible test pressure.

1. Connect the test device on the low pressure side and high pressure side 1.
   Or
   Connect the test device on the low pressure side and high pressure side 2.

Testing pressure resistance (cont.)

2. Carry out a pressure test with nitrogen:
   Test pressure: 1.43 x permissible operating pressure for **max. 10s**
   Permissible operating pressure: See chapter "Specification".

Filling the refrigerant circuit

In comparison to non-flammable refrigerants, the following points must **additionally** be observed when topping up flammable refrigerants:
- Do not use the same fill valve for different refrigerants.
- Position refrigerant bottles vertically.

Before commencing work, note the chapter "Checklist for maintenance work": See page 71.

1. Check whether the safety instructions for work on the refrigerant circuit are being adhered to: See chapter "Safety instructions".

2. Earth the refrigerant circuit.

3. Perform the leak test with forming gas.

4. Ensure the following conditions for filling are met:
   - Refrigerant circuit has been drained and evacuated: See chapter "Extracting refrigerant".
   - Absolute pressure for vacuum according to EN 378 before filling: < 2.7 mbar (< 270 Pa)
   - If any components were replaced, observe all information in the separate installation instructions.
   - If national regulations require a pressure resistance test after repair work (e.g. soldering work, component replacement), carry out the pressure resistance test first: See chapter "Testing pressure resistance".

5. Fill refrigerant circuit with refrigerant R290 (propane) via the Schrader valve of high pressure side 2 (liquid line): See chapter "Overview of internal components".
   Refrigerant charge: See chapter "Specification".

   Danger
   An excessive refrigerant charge leads to a risk of explosion.
   Do not overfill the refrigerant circuit:
   - Weigh the refrigerant bottle before filling.
   - The refrigerant charge is equal to the weight reduction of the refrigerant bottle.

   Danger
   Oxygen in the refrigerant circuit can cause a fire or explosion during operation.
   When filling the refrigerant circuit ensure that neither air nor oxygen gets into the refrigerant circuit.

6. Close the Schrader valve so it is gas-tight. Fit the sealing cap. To achieve this, counterhold the valve body.
   - Torque for sealing cap union nut: 11 Nm
   - Torque for valve body: 0.25 Nm

7. Affix a label to the heat pump in a clearly visible position, with the following content, with date and signature:
   - Type of topped up refrigerant
   - Amount of topped up refrigerant

8. If required by law, enter the measured values, data and components determined in the operating manual.

9. Seal the sealing caps of the low pressure and high pressure Schrader valves: See chapter "Outdoor unit maintenance: Overview of internal components".

Status display for central circulation pump (secondary pump)

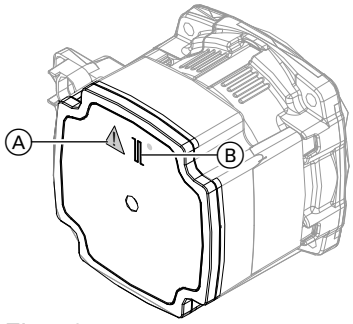

Fig. 59

LED	Meaning
Ⓑ flashes green.	Normal operation, circulation pump runs on demand.
Ⓑ shows a steady green light.	▪ Circulation pump runs continuously with maximum output, e.g. when the LIN signal is interrupted. ▪ No fault message
Ⓐ shows a steady red light.	▪ Fault with fault message ▪ After the indoor unit has been disconnected from the power supply, the LED lights up for approx. 30 to 60 s for the duration of the run-on time. Do not start work on the indoor unit until this run-on time has elapsed.

Checking the temperature sensors

- All temperature sensors are connected to the OCU refrigerant circuit controller.
- All temperature sensors are NTC type 10 kΩ.
- Position of the temperature sensors: See chapter "Overview of internal components".

Checking the temperature sensors (cont.)

NTC 10 kΩ (no marking)

ϑ / °C	R / kΩ	ϑ / °C	R / kΩ	ϑ / °C	R / kΩ	ϑ / °C	R / kΩ	ϑ / °C	R / kΩ	ϑ / °C	R / kΩ
–40	325.700	–8	49.530	24	10.450	56	2.874	88	0.975	120	0.391
–39	305.400	–7	46.960	25	10.000	57	2.770	89	0.946	121	0.381
–38	286.500	–6	44.540	26	9.572	58	2.671	90	0.917	122	0.371
–37	268.800	–5	42.250	27	9.164	59	2.576	91	0.889	123	0.362
–36	252.300	–4	40.100	28	8.776	60	2.484	92	0.863	124	0.352
–35	236.900	–3	38.070	29	8.406	61	2.397	93	0.837	125	0.343
–34	222.600	–2	36.150	30	8.054	62	2.313	94	0.812	126	0.335
–33	209.100	–1	34.340	31	7.719	63	2.232	95	0.788	127	0.326
–32	196.600	0	32.630	32	7.399	64	2.155	96	0.765	128	0.318
–31	184.900	1	31.020	33	7.095	65	2.080	97	0.743	129	0.310
–30	173.900	2	29.490	34	6.804	66	2.009	98	0.721	130	0.302
–29	163.700	3	28.050	35	6.527	67	1.940	99	0.700	131	0.295
–28	154.100	4	26.680	36	6.263	68	1.874	100	0.680	132	0.288
–27	145.100	5	25.390	37	6.011	69	1.811	101	0.661	133	0.281
–26	136.700	6	24.170	38	5.770	70	1.750	102	0.642	134	0.274
–25	128.800	7	23.020	39	5.541	71	1.692	103	0.624	135	0.267
–24	121.400	8	21.920	40	5.321	72	1.636	104	0.606	136	0.261
–23	114.500	9	20.890	41	5.112	73	1.581	105	0.589	137	0.254
–22	108.000	10	19.910	42	4.912	74	1.529	106	0.573	138	0.248
–21	102.000	11	18.980	43	4.720	75	1.479	107	0.557	139	0.242
–20	96.260	12	18.100	44	4.538	76	1.431	108	0.541	140	0.237
–19	90.910	13	17.260	45	4.363	77	1.385	109	0.527	141	0.231
–18	85.880	14	16.470	46	4.196	78	1.340	110	0.512	142	0.226
–17	81.160	15	15.720	47	4.036	79	1.297	111	0.498	143	0.220
–16	76.720	16	15.000	48	3.884	80	1.256	112	0.485	144	0.215
–15	72.560	17	14.330	49	3.737	81	1.216	113	0.472	145	0.210
–14	68.640	18	13.690	50	3.597	82	1.178	114	0.459	146	0.206
–13	64.950	19	13.080	51	3.463	83	1.141	115	0.447	147	0.201
–12	61.480	20	12.500	52	3.335	84	1.105	116	0.435	148	0.196
–11	58.220	21	11.940	53	3.212	85	1.071	117	0.423	149	0.192
–10	55.150	22	11.420	54	3.095	86	1.038	118	0.412	150	0.187
–9	52.250	23	10.920	55	2.982	87	1.006	119	0.401		

Checking the pressure sensors

Heating water pressure sensor (BP03)

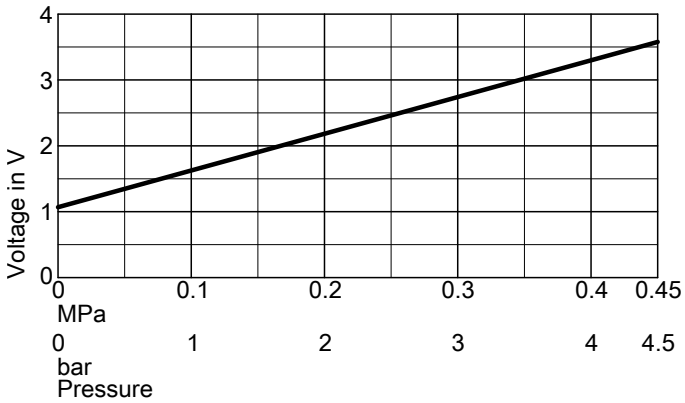

Fig. 60

Refrigerant circuit pressure sensors

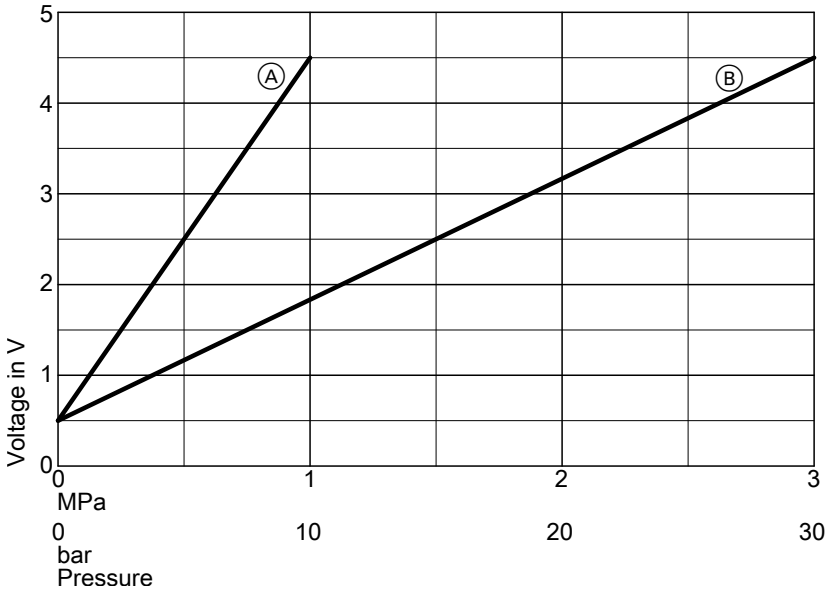

Fig. 61

Ⓐ Low pressure sensor (BP02)
Ⓑ High pressure sensor (BP01)

Checking the fuses

The fuses are located on the OCU refrigerant circuit controller: See chapter "Overview of electrical components".

Fuse type:
- 6.3 A H (slow), 250 V~
- Max. power loss ≤ 2.5 W

⚠ **Danger**
Removing fuses does **not switch the power circuit to zero volt**. Contact with live components can lead to serious injury from electric current.
Before working on the equipment, always ensure that **the power circuit is also at zero volt.**

1. Switch off the power supply.
2. Remove right-hand side panel of the outdoor unit.

Checking the fuses (cont.)

3. Check the fuse. Replace if required.

Danger
Incorrect or improperly fitted fuses can lead to an increased risk of fire.
- Insert fuses without using any force. Position fuses correctly.
- Only use structurally identical types with the same response characteristics.

Specification

Vitocal 200-A outdoor unit

Types of Vitocal 200-A outdoor unit:
- AWMOF-201.A1.**06**-230-V004
  to
  AWMOF-201.A1.**12**-230-V004
- AWMOF-201.A1.**06**-230-V005
  to
  AWMOF-201.A1.**12**-230-V005

Note
- *The highlighted number is the size of the outdoor unit.*
- *Instantaneous heating water heater for types ...-V004:*
  - *Operation of the instantaneous heating water heater only if heat pump operation is not possible (protective function)*
  - *Power supply via mains connection of the outdoor unit*
- *Instantaneous heating water heater for types ...-V005:*
  - *Operation of the instantaneous heating water heater also possible in addition to heat pump operation, e.g. for convenient DHW heating (comfort function)*
  - *Power supply via separate mains connection*
- *These specifications are **provisional**. The specifications at the time of delivery of the series product are definitive.*

Size		**06**	**08**	**10**	**12**
Heating performance data to EN 14511 (A–7/W35)					
Rated heating output	kW	5.46	6.80	8.7	9.7
Heating performance data to EN 14511 (A–7/W55)					
Rated heating output	kW	5.2	7.0	8.4	9.4
Heating performance data to Commission Regulation (EU) No 813/2013 (average climatic conditions)					
Low temperature application (W35)					
▪ Energy efficiency η_S	%	202	202	208	204
▪ Rated heating output P_{rated}	kW	5	5.9	8.8	9.8
Medium temperature application (W55)					
▪ Energy efficiency η_S	%	151	153	155	155
▪ Rated heating output P_{rated}	kW	4.8	5.7	8.6	9.6
Energy efficiency class to Commission Regulation (EU) No 813/2013					
Heating, average climatic conditions					
▪ Low temperature application (W35) (D→A^{+++})		A^{+++}	A^{+++}	A^{+++}	A^{+++}
▪ Medium temperature application (W55) (D→A^{+++})		A^{+++}	A^{+++}	A^{+++}	A^{+++}
Air inlet temperature					
Max. air inlet temperature, cooling mode	°C	45	45	45	45
Min. air inlet temperature, heating mode					
▪ Refrigerant circuit switch-off temperature	°C	–25	–25	–25	–25
▪ Refrigerant circuit switch-on temperature	°C	–20	–20	–20	–20
Heating water (secondary circuit)					
Max. flow temperature	°C	75	75	75	75
Max. flow temperature (A–10)	°C	70	70	70	70

Specification (cont.)

Size		06	08	10	12
Electrical values, types ...-V004					
Rated voltage		1/N/PE 230 V~/50 Hz			
Max. operating current	A	14	14	16	20
Max. heating output, instantaneous heating water heater (1-stage)	kW	1x 3.2	1x 3.2	1x 3.2	1x 3.2
Electrical values, types ...-V005					
Rated voltage		1/N/PE 230 V~/50 Hz			
Max. operating current	A	14	14	16	20
Rated voltage, instantaneous heating water heater		1/N/PE 230 V~/50 Hz			
Max. heating output, instantaneous heating water heater (2-stage)	kW	2x 3.2	2x 3.2	2x 3.2	2x 3.2
Max. power consumption					
▪ Integrated central circulation pump (secondary pump, PWM)	W	63	63	63	63
▪ Energy efficiency index EEI of the circulation pump		≤ 0.20	≤ 0.20	≤ 0.20	≤ 0.20
Refrigerant circuit					
Refrigerant		R290	R290	R290	R290
▪ Safety group		A3	A3	A3	A3
▪ Charge weight	kg	1	1	1.4	1.4
Compressor (hermetically sealed)	Type	Twin rotary			
▪ Oil in compressor	Type	PAG	PAG	PAG	PAG
Outdoor unit dimensions					
Total length	mm	530	530	530	530
Total width	mm	1140	1140	1140	1140
Total height	mm	808	808	1008	1008
Total weight	kg	93	93	118	118
Permissible operating pressure on the secondary side	bar	3	3	3	3
	MPa	0.3	0.3	0.3	0.3
Connections					
Heating water flow/return (male thread)		G 1	G 1	G 1	G 1
Sound power at rated heating output Total sound power level measurement with reference to DIN EN 12102-1:2023 and DIN EN ISO 3744:2011 in ErP point C to DIN EN 14825 with operating conditions A7/W55					
▪ ErP	dB(A)	48	53	54	55
▪ Max.	dB(A)	56	59	61	61
▪ Low-noise mode, stage 2	dB(A)	54	56	56	56

Specification (cont.)

Flow rates and minimum system volume

Size	Up to 08	From 10
Secondary side flow rates in heating mode (heating water)		
Minimum flow rate	0.350 m^3/h (350 l/h)	0.350 m^3/h (350 l/h)
Max. flow rate	2.100 m^3/h (2100 l/h)	2.100 m^3/h (2100 l/h)
Secondary-side flow rates in cooling mode (cooling water)		
Minimum flow rate	0.700 m^3/h (700 l/h)	0.700 m^3/h (700 l/h)
Max. flow rate at the following flow temperatures:		
▪ < 11 °C	< 1.300 m^3/h (1300 l/h)	< 1.300 m^3/h (1300 l/h)
▪ ≥ 11 °C to < 12	< 1.400 m^3/h (1400 l/h)	< 1.400 m^3/h (1400 l/h)
▪ ≥ 12 °C to < 14	< 1.600 m^3/h (1600 l/h)	< 1.600 m^3/h (1600 l/h)
▪ ≥ 14 °C to < 27	< 1.800 m^3/h (1800 l/h)	< 1.800 m^3/h (1800 l/h)
▪ ≥ 27 °C	No limit	No limit
Primary side flow rates (air)		
Minimum flow rate	810 m^3/h	560 m^3/h
Max. flow rate	3380 m^3/h	4090 m^3/h
Defrost		
Required defrost energy	2000 kJ	3000 kJ
Minimum flow rate	950 l/h	1300 l/h
Minimum system volume for the following maximum flow temperatures in the heating circuits:		
▪ ≥ 35 °C to < 45	40 l	52 l
▪ ≥ 45 °C to < 55	30 l	40 l
▪ ≥ 55 °C	30 l	30 l

Sound transmission checklist

Sound transmission from the outdoor unit to e.g. the living space can occur even if the sound limit values are observed.

Basic information on noise generation through sound transmission:

- Engineering standards:
  For example TA Lärm [Germany]
- Information on sound propagation, sound pressure, sound power, sound values:
  Technical guide for the heat pump
- Information on installing the heat pump:
  Chapter "Installing the outdoor unit, installation instructions"
- Information on installing the heat pump:
  Chapter "Installing the outdoor unit, installation location" and "Installing the outdoor unit, minimum clearances"

The perception of sound is subjective. For example, an increase of 10 dB is often perceived to be twice as loud and a decrease of 10 dB half as loud.
Although sound can be measured, smartphones are not suitable for recording noise caused by sound transmission.

In the event of noise problems due to sound transmission, check whether the following requirements are met:

1. Installation location of the outdoor unit, e.g. exposed to wind, other appliances or machines in the immediate vicinity
2. Installation, e.g. minimum clearances
3. Transport brackets removed
4. Floor or wall mounting, e.g. vibration compensation for refrigerant lines, no structure-borne sound bridges through walls, etc.
5. Line routing with sound insulation and vibration isolation, e.g. secure the lines using pipe clips with a soft elastic insulating lining (EPDM); no structure-borne sound bridges through walls, etc.
6. Line lengths and cross-sections
7. Installation location of the indoor unit, e.g. ambient conditions, position in the room, other appliances or machines in the immediate vicinity
8. Professional sound insulation to floors and walls (concrete, brick wall, timber studs, etc.)
9. Oil lift bends if there is a height differential of > 2 m between the indoor and outdoor unit
10. Routing the refrigerant lines below or above ground level

In the event of problems with noise caused by sound transmission, the following information is helpful for a consultation with the manufacturer's technical support:

Description of the noise

Type of sound

☐ Structure-borne noise
☐ Airborne noise

Type of noise

☐ Buzzing
☐ Humming
☐ Rattling
☐ Whistling
☐ Hissing
☐ Beeping
☐ Other

_____

_____

Duration of the noise

☐ Brief
☐ Constant
☐ Other

_____

_____

Description of noise perception

Where is the noise perceived?

Room:

_____

Other

_____

Who perceives the noise?

_____

6260605

Sound transmission checklist (cont.)

When is the noise perceived?

Date/time

Individual conditions at the specified time

Operating status of the heat pump at the time of noise perception

Date/time

Operating program

- ☐ Heating mode
- ☐ Cooling mode
- ☐ DHW heating
- ☐ Defrost mode

Temperatures

Flow temperatures:

Return temperature:

Other temperatures:

Speeds

Compressor speed:

Fan speed:

Further details

Sound transmission checklist (cont.)

Sound measurements

☐ **Sound measurement carried out**

Date/time:

Sound pressure value at a distance of 1 m from the outdoor unit:

Sound pressure value at a distance of 3 m from the outdoor unit:

Sound pressure value at a distance of 10 m from the outdoor unit:

☐ **Reference measurement carried out with the heat pump switched off**

Date/time:

Sound pressure value at a distance of 1 m from the outdoor unit:

Sound pressure value at a distance of 3 m from the outdoor unit:

Sound pressure value at a distance of 10 m from the outdoor unit:

For further analysis, it is helpful if we are able to visualise the building situation:

☐ Floor plan with dimensions
☐ Designation of the rooms
☐ System components
☐ Line routing
☐ Type of floors, walls and ceilings
☐ Photos of the building and the installation situation
☐ Labels showing where greater noise perception occurs

Final decommissioning and disposal

Viessmann products can be recycled. Components and substances from the system are not part of ordinary domestic waste.
Isolate the system from the power supply for decommissioning. Allow any hot components to cool down.
All components must be disposed of correctly.

⚠ **Danger**
Escaping refrigerant can lead to explosions that result in very serious injuries.
Do not introduce any power sources or ignition sources into the safety zone.
- Complete units and compressors are only to be disposed of via qualified disposal specialists.
- In the case of damage to the refrigerant circuit or suspected leakage from the refrigerant circuit, evacuate the refrigerant circuit. Fill with nitrogen or comparable gases.

Observe the following regulations:
- Fluorinated greenhouse gas regulation (EU) 2024/573
- Currently applicable regulations and requirements

Final decommissioning and disposal (cont.)

Note
***Before** commencing decommissioning, note the "Checklist for maintenance work": See page 71.*

Decommissioning:
- Positioning requirements apply for all the time that the outdoor unit is filled with refrigerant: See page 18.
- Decommissioning may only be carried out by a qualified contractor who is familiar with the equipment used for refrigerant disposal.
- For decommissioning and disposal, work on the refrigerant circuit may only be carried out by qualified and certified personnel: See "Safety information".
- Check that it is possible to transport the outdoor unit safely. Where applicable, extract the refrigerant: See chapter "Extracting the refrigerant" on page 84.

Frost protection:
- To avoid frost damage, completely remove heating water from the connection lines and the condenser (not required with frost-free storage).

Interim storage:
- Interim storage only above ground level with natural ventilation opening to the outside
- Ensure adequate air circulation during interim storage.
- If the outdoor unit dismantled for disposal is not stored in accordance with the siting requirements, the following steps must be carried out:
- Check that it is possible to transport the outdoor unit safely. Where applicable, extract the refrigerant: See chapter "Extracting the refrigerant" on page 84.

Transport:
- Observe transport information: See page 18.
  Observe all applicable regulations and requirements.
  Note
  According to the European regulation on the carriage of dangerous goods by road (ADR), Special Regulation 291, no special transport requirements need to be followed when transporting complete units containing less than 12 kg of flammable refrigerant.
- Transport only in the upright position
- Use suitable transport brackets.
- Ensure adequate air circulation during transport.
- Keep ignition sources away, e.g. flying sparks, smoking, etc.

Ordering individual parts for accessories

Please affix accessory labels with part numbers here.
Please specify the relevant part no. when ordering individual parts.

Declaration of conformity

We, Viessmann Climate Solutions GmbH & Co. KG, Viessmannstrasse 1, 35108 Allendorf (Eder), Germany, declare as sole responsible body that the named product complies with the European directives and supplementary national requirements in terms of its design and operational characteristics.

Using the serial number, the Declaration of Conformity can be found on the following website:
www.viessmann.co.uk/eu-conformity

Keyword index

A
Air inlet..... 24, 25, 30, 31, 32
Air inlet temperature.....93
Air outlet..... 24, 25, 30, 31, 32
Air short circuit..... 22
Anti-vibration base..... 19, 38
Anti-vibration mounts..... 22
Appliance fuse, checking..... 91
Appliance too loud.....96
Arrangement of heat pump cascade.....30
Available system examples.....14

B
Bracket for wall mounting.....44
Bracket set..... 20, 44
Brazing/soldering work.....71
Bus connection.....51, 53

C
CAN bus communication cable..... 16, 17, 51, 53
Capacitor discharging..... 72
Cellar shaft.....23
Certificate of competence..... 71
Checking
– Fuse..... 91
– Pressure sensors..... 91
– Sensors.....89
Checklist, maintenance.....71
Coastal siting.....21
Commissioning.....62, 67
Communication cable.....51, 53
Compressor.....18, 19
Condensate.....21
Condensate drain.....44, 66
– In seepage layer.....33
– Via drain pipe..... 33
– Via waste water system..... 34
– Without drain pipe..... 33
Connecting cables.....41, 42, 43, 44
Connection
– Electrical.....49
– Overview..... 16
Connection, heat pump control unit/outdoor unit..... 53
Connection between indoor and outdoor units.....51
Connection conditions.....54
Corrosion.....72
Crane..... 18

D
Decommissioning.....98
Defrosting.....22
Design casing.....43
Dimensions
– Outdoor unit..... 94
Disposal facility..... 85
Diverter valve..... 77, 78
Drain for condensate.....44
Draining.....79

E
Earth connection..... 72
Electrical connections
– Checking, outdoor unit..... 62
– Overview..... 74
Electrical values
– Outdoor unit..... 94
Electric cables.....41, 42, 43, 44
Electric ribbon heater..... 22
Electronic expansion valve.....77, 79
Energy efficiency class.....93
Extraction equipment..... 85

F
Fan.....63
Fill valve..... 88
Fire extinguisher.....71
Fixing materials.....20
Flammable atmosphere..... 73
Flat roof installation.....20
Floor mounting bracket..... 19
Floorstanding installation..... 19, 34
Floorstanding installation, outdoor unit..... 40, 41, 42
Flow temperature sensor
– Secondary circuit.....77, 78, 79
Foundation..... 36, 37, 38, 39, 41, 42, 43
Foundations..... 40, 41, 42
Free running of fan, checking.....63
Frost protection for foundations... 36, 37, 39, 41, 42, 43
Fuse..... 91
– Max. power loss..... 75, 91

G
Gravel bed for condensate.....
36, 37, 39, 40, 41, 42, 43, 44

H
Heat exchanger, cleaning.....66
Heating water.....93
Heating water pressure sensor, checking..... 91
Heat pump
– Closing..... 67
– Opening.....62
Heat pump cascade
– Minimum clearances..... 25, 30
High pressure fault.....22
Hydraulics..... 12

I
Identification.....74
Ignition sources.....71, 72, 73
Indoor unit
– Instantaneous heating water heater mains connection..... 56
Inspection.....62, 67
Installation
– Outdoor unit..... 18
Installation, outdoor unit
– Bracket set for wall mounting.....20
Installation information..... 19

6260605

Keyword index (cont.)

Installation location, outdoor unit....22
Instantaneous heating water heater....13
– Mains connection....56
– Specification....94
Intended use....11
Internal components....76
Isolators....54

L
Layout, heat pump cascade....25
Leak detection....73
Leak detection processes....73
Leak test....64
– Refrigerant circuit....64
Lightning protection....21
Likelihood of corrosion....21
Liquid gas temperature sensor....77, 79
Liquid leak detectors....73

M
Mains connection
– General information....54
– Instantaneous heating water heater....56
Mains isolator....62, 76
Maintenance....71
Maintenance personnel....71
Max. tilting angle....18, 19
Minimum clearances
– Heat pump cascade....25, 30
– Outdoor unit....23

N
No smoking signs....72

O
On-site connections....16
Operating noise....69
Outdoor unit
– Cleaning....66
– Dimensions....16, 17, 94
– Electrical connections, checking....62
– Electrical values....94
– Floorstanding installation with bracket....40, 42
– Floorstanding installation with support....41
– Installation....18
– Internal components....76
– Noise checks....69
– Wall mounting....44
– Wall mounting with bracket....44
Outdoor unit, opening....45
Outdoor unit installation
– Floor mounting brackets....19
Overview
– Electrical connections....74
– Internal components....76
– Pumps....76
– Sensors....76
– Valves....76
Oxygen-free nitrogen....73

P
Permissible operating pressure....94
Personal protective equipment....84
Power cable....16, 17, 49
Power circuits....54
Power consumption....94
Power-OFF
– Without on-site load disconnect....57
Premium tariff meter....58
Pressure resistance
– Testing....74, 87
Pressure sensors, checking....91
Product information....12
Protective equipment....84
Protective gloves....65
Pumps....76

R
RCD....54, 58
Recommended power cables....49
Recycling bottles....84
Refrigerant....18
– Extracting....73, 84
Refrigerant bottle....84, 85, 88
Refrigerant charge....72
Refrigerant circuit....12, 94
– Filling....74, 88
– Testing....64
Refrigerant detector....71, 88
Refrigerant detectors....73
Repair work....62, 67, 73
Requirements for installation location
– Outdoor unit....22
Ripple control receiver....58

S
Safety check....72
Safety goggles....65
Safety valve....84
Safety zone....26, 85, 86
– Heat pump cascade....30
Sealed enclosures....73
Seal rings, replacing....64
Seepage layer....33
Self-consumption....54
Sensor curves....89
Sensors....76, 89
Service....62, 67
Servicing work....71
Shutdown....74
Shut-off valve....84
Siting....18, 21
– Between walls....22
– In recesses....22
Siting aid....18
Sound power....94
Sound propagation....23
Sound reflection....23
Sound transmission....96
Sound transmission checklist....96

6260605

Specification.....93
Suction equipment..... 84
Supply..... 54
System examples.....14

T
Temperature sensor..... 89
– Hot gas.....77, 79
– Suction gas..... 77, 78
Testing
– Refrigerant circuit.....64
Tilting angle.....18, 19
TNC system..... 58
Total weight..... 94
Transport.....18
Transport aid..... 18
Transport bracket..... 59
Trap.....66
Type plate.....13

U
Use..... 11

V
Ventilation of work location.....72
Vibration isolation.....22

W
Wall mounting
– Bracket set..... 44
– Outdoor unit..... 44
Weather influences..... 21
Weatherproofing.....21
Welding work.....71
Wind direction..... 21
Wind loads..... 21
Wiring.....73
Working environment..... 71

Viessmann Climate Solutions SE
35108 Allendorf / Germany
A Carrier Company
Telephone: +49 6452 70-0
Fax: +49 6452 70-2780
www.viessmann.de

Viessmann Limited
A Carrier Company
Hortonwood 30, Telford
Shropshire, TF1 7YP, GB
Telephone: +44 1952 675000
Fax: +44 1952 675040
E-mail: info-uk@viessmann.com

6260605 Subject to technical modifications.