RAV - Digital Inverter - Outdoor Units - 1601 - 1ph & 3ph

- Quiet operation as low as 33dB (A)
- Standby power consumption reduced by 50% to 6W
- Up to 12.8 kW in only 890mm height and 69kg weight
- Wide ambient range: cooling -15°C to +46°C heating +15°C to -15°C
- Power limitation by 1% step between 50% and 100% load for optimal capacity control

Retail Price (interactive icons):

Hi - Res Image

STANDARD PRODUCT RANGE				
Performance				
Outdoor Unit		RAV	GM1601ATP-E	GM1601AT8P-E
Operating Range	Cooling	C°	-15 to 46	-15 to 46
	Heating		-15 to 15	-15 to 15
Air Flow	High	m3/h - l/s	6900 - 1917	6900 - 1917
Sound	Pressure High Cooling/Heating	dB(A)	53 - 55	53 - 55
	Power High Cooling/Heating	dB(A)	70 - 72	70 - 72
Unit	Height x Width x Depth	mm	1340 x 900 x 320	1340 x 900 x 320
	Weight	kg	95	94
Pipe Connection	Flare Connections (gas - liquid)	inch	5/8 -3/8	5/8 -3/8
	Min.-Max. Length	m	5 - 50	5 - 50
	Maximum Height Difference	m	±30	±30
	Drain Port Connection	mm	16	16
Refrigerant Charge	Gas - Base Charge/Chargeless Length	m	R32 - 2.4/30	R32 - 2.1/30
	Additional Charge Liquid Side	g/m	35	35
Run Current	Maximum	Amps	21.71	7.23
Power Cable	Outdoor to Indoor		3 core + earth	3 core + earth
Power Supply	Suggested Fuse Size	V/ph/Hz-A	220-240/1/50-32	380-415/3/50-16

Related items:

- BIM files
- CAD files
- Refrigerant cycle diagram
- Dimensional drawing
- Wiring diagram
- Noise curve data
- Installation manual - 1ph / 3ph

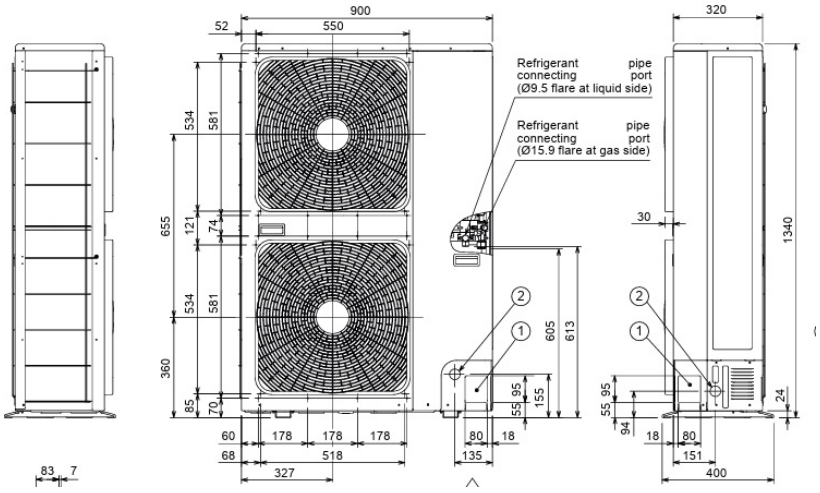

1601