TOSHIBA Leading Innovation >>>

Toshiba Air Conditioning - RAV-GP Data Sheet

RAV-GP1401AT-E
Outdoor Unit

Features

- Redesigned for use with refrigerant R32
- Wide operating range (cooling mode -15˚C to +52˚C)
- Auto-diagnostic function
- Flexible, can be utilised for single, twin, triple and quad indoor applications
- Compact size

Technical Data

Model reference			RAV-GP1401AT-E
Nominal	Cooling Capacity	kW	12.5
	Heating Capacity	kW	14.0
Operating Range	Cooling/Heating	˚C	-15 to 52/-27 to 15
Air Flow	High	m³/h - l/s	6960 - 1934
Sound	Pressure High Cooling/Heating	dB(A)	50/51
	Power High Cooling/Heating	dB(A)	67/68
Unit	Height x Width x Depth	mm	1550 x 1010 x 370
	Weight	kg	104
Pipe Connection	Flare Connections (gas - liquid)	inch	5/8 - 3/8
	Min.-Max. Length	m	3-75
	Maximum Height Difference	m	±30
	Drain Port Connection	mm	16
Refrigerant R32	Base Charge/Chargeless Length	kg/m	3.1/30
	Additional Charge Liquid Side	g/m	35
Run Current	Maximum	A	14.55
Power Cable	Outdoor to Indoor		3 core + earth
Power Supply	Suggested Fuse Size	V/ph/Hz-A	220-240/1/50-25

Dimensional Drawings

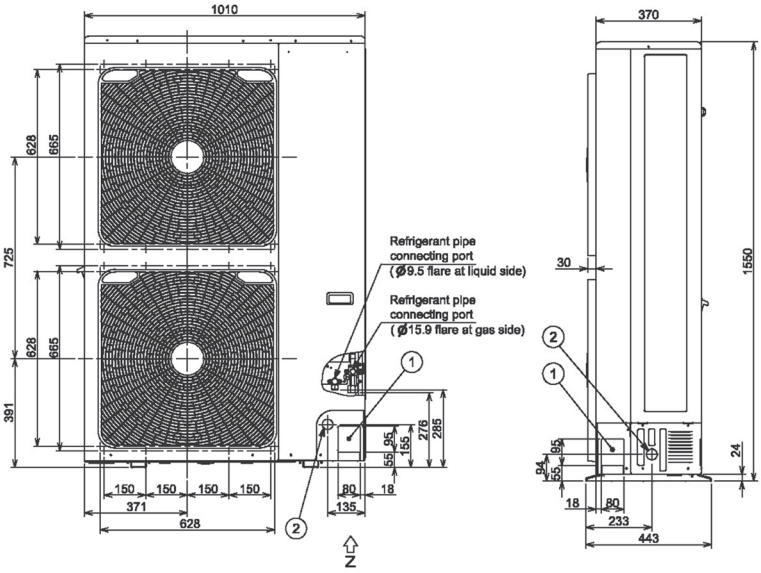

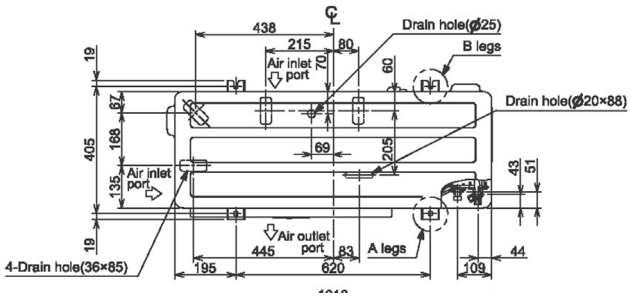

Cool Designs Ltd

Raising the Standards in Air Conditioning Distribution

www.cdlweb.info

CERTIFIED CARBON NEUTRAL® division CarbonNeutral.com

All UK duties are based on Cooling Indoor air temperature 22˚C DB/16˚C WB Outdoor air temperature 28˚C DB 50% RH, high fan speed, 5 m pipe run.
Heating Indoor air temperature 20˚C DB Outdoor air temperature -5˚C DB 100% RH, high fan speed, 5 m pipe run. Values are based on the maximum compressor output.
Data obtained from Toshiba Air Conditioning Published Data July 2018.